RR 2T ENDURO 2019
125cc

RR 2T ENDURO 2019
125cc RACING

CATALOG OF SPARE PARTS

The images and content herein are the exclusive property of Betamotor SpA, which reserves all rights thereto. Any reproduction, modification, editing, dissemination, communication, exploitation in any form and way, original or derived, is strictly forbidden if not expressly approved in writing by Betamotor SpA. Any violation will be actively pursued in all relevant civil and criminal forums by Betamotor SpA.

Beta motorcycles

TAV.01A Carter completo - Cranckcase, assy - Carter complet - Kurbelwellengehäuse, KPL. - Carter completo

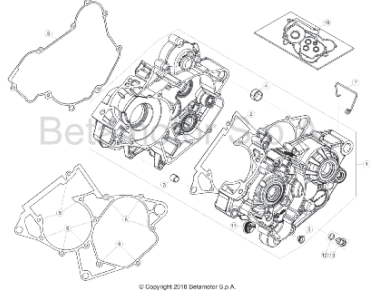

Pag. 6

TAV.01B Coperchio frizione - Clutch cover - Couvercle d'embrague - Kupplungsdeckel - Tapa embrague

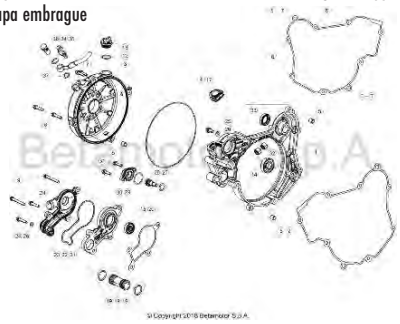

Pag. 8

TAV.01C Collettore aspirazione - Intake manifold - Collecteur aspiration - Ansaugstutzen - Colector aspiración

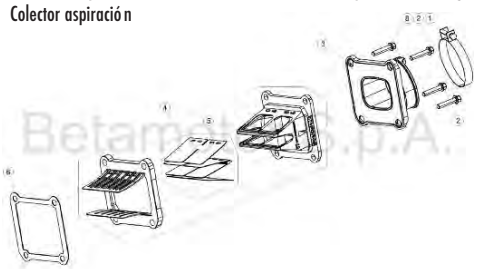

Pag. 10

TAV.02 Albero motore - Crankshaft - Vilebrequin - Kurbelwelle - Cigüeñal

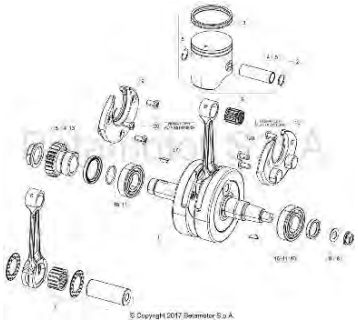

Pag. 11

TAV.03 Frizione - Clutch - Embrayage - Kupplung - Embrague

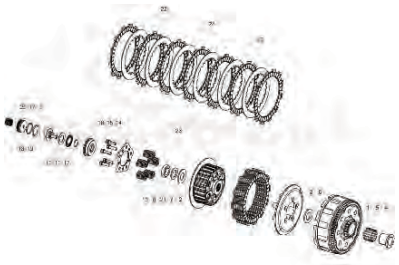

Pag. 12

TAV.04A Albero primario - Main shaft - Arbre primaire - Hauptwelle - Arbol primario

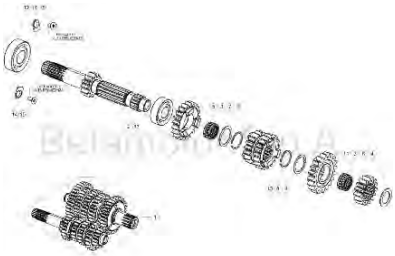

Pag. 14

TAV.04B Albero secondario - Counter shaft - Arbre secondaire - Nebengetriebewelle - Eje secundario

Pag. 15

TAV.05 Comando cambio - Gear shift control - Commande changement de vitesse - Chaltung - Mando cambio

Pag. 16

TAV.06 Avviamento a pedale - Kickstarter - Dé marrage à pedal - Pedalstart - Arranque a pedal

Pag. 16

TAV.07 Avviamento elettrico - Electric starter - Dé marrage é lectrique - Elektrischer start - Arranque elé ctrico

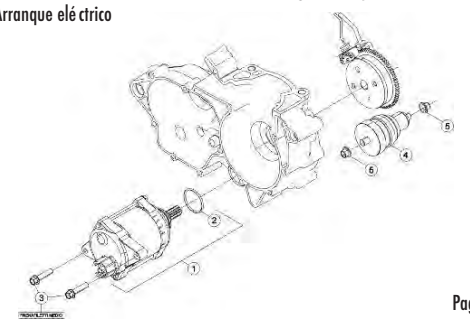

Pag. 17

TAV.09 Valvole e bilancieri - Valves and rocker arms - Vannes et culbuteurs - Ventile und Kipphebel - Vá lvulas y balancines

STANDARD **RACING**

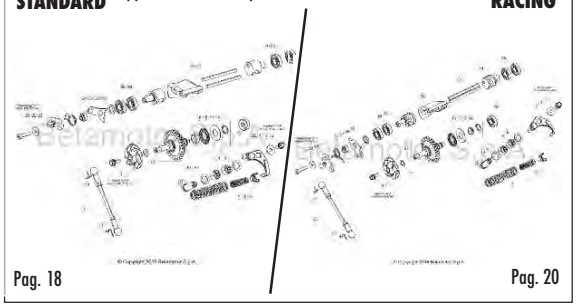

Pag. 18

Pag. 20

TAV.10 Gruppo accensione elettronica - Electronic ignition assy. - Groupe allumage electronique - Elektronichezü nduk gruppe - Grupo encedido electró nico

Pag. 22

TAV.11 Cilindro completo - Cylinder , assy - Cylindre complet - Zylinder, KPL. - Cilindro completo

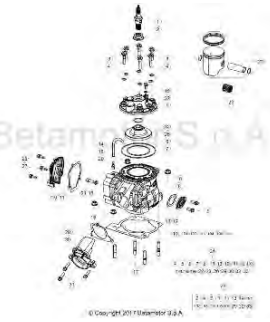

Pag. 24

TAV.12 Carburatore - Carburettor - Carburateur - Vergaser - Carburador

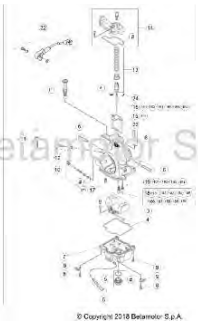

Pag. 26

TAV.14Attrezzatura specifica - Special tools - Outillage spé cial - Spezialwerkzeug - Utillaje especifico

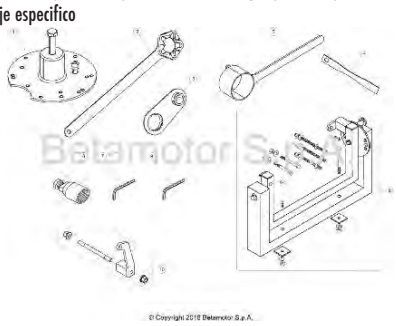

Pag. 28

TAV.31 Telaio - Frame - Chassis - Rahmen - Chasis

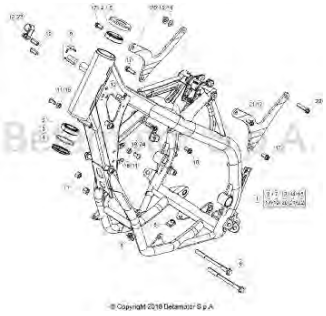

Pag. 30

TAV.32 Accessori telaio - Frane accessories - Accessoires chassis - Rahmenzubehö ren - Accesorios Chasis

Pag. 32

TAV.33A Ammortizzatore posteriore - Rear damper - Amortisseur arriere - Hinterer Stoßdä mpfer - Amortiguador posterior

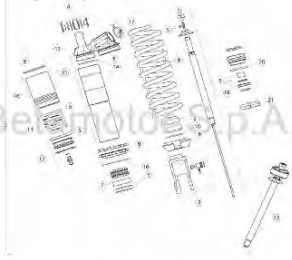

Pag. 34

TAV.33B Forcellone posteriore - Rear fork - Fouche arriere - Hinterradschwinge - Horquilla posterior

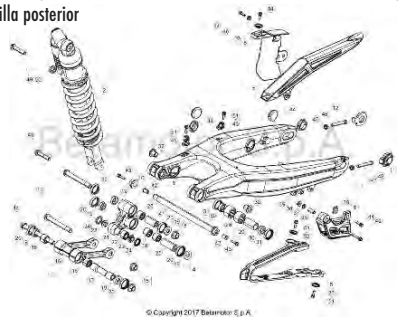

Pag. 36

TAV.34 Forcella anteriore - Front fork - Fourche AV. - Vorderradgabel - Horquilla delantera

STANDARD **RACING**

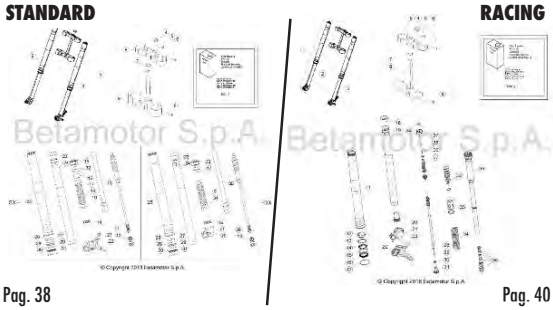

Pag. 38

Pag. 40

TAV.35 Comandi-Manubrio - Controls-Handlebars - Commandes-Guidon - Bedienungselemente-Lenker - Mandos-Manillar

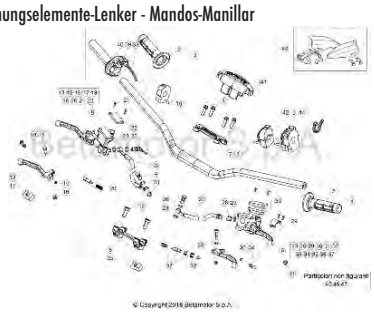

Pag. 42

TAV.36 Impianto freni idraulici - Hydraulic brakes system - Installation des freins hydrauliques - Hidraulichebremse anlage - Instalación freno hidráulico

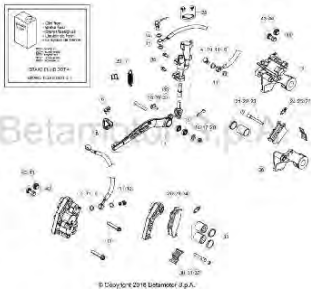

Pag. 44

TAV.37 Gruppo scarico - Exhaust system - Echappement - Auspuffanlage - Grupo escape

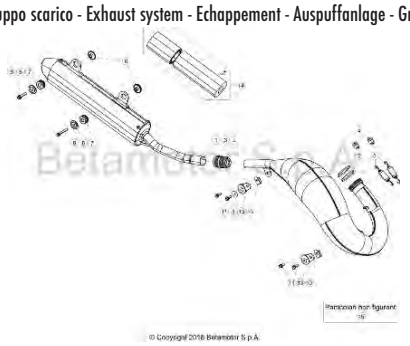

Pag. 46

TAV.38 Scatola filtro - Filter box - Boîtier du filtre - Sicherungskasten - Caja del filtro

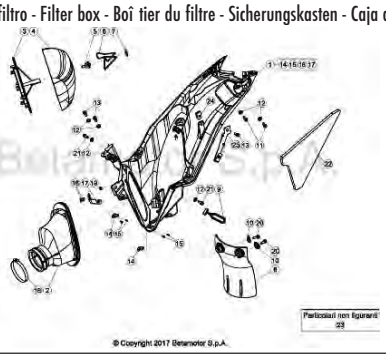

Pag. 47

TAV.39 Impianto di raffreddamento - Installation de refroidissement - Installation de refroidissement - Kühlsystem - Instalación de enfriamiento

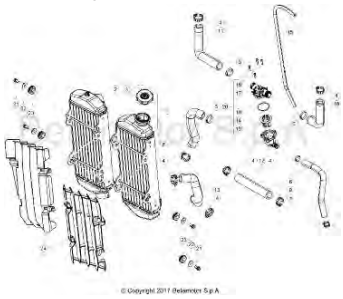

Pag. 48

TAV.40 Impianto elettrico - Electrical equipment - Installation electrique - Elektrische anlage - instalación electrica

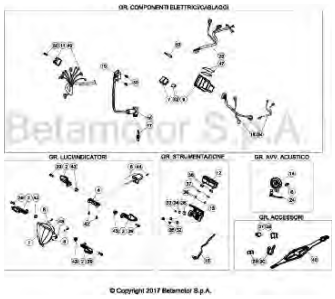

Pag. 50

TAV.41 Ruota anteriore - Front wheel - Roue AV. - Vorderrad - Rueda delantera

Pag. 52

TAV.42 Ruota posteriore - Rear wheel - Roue AR. - Hinterrad - Rueda trasera

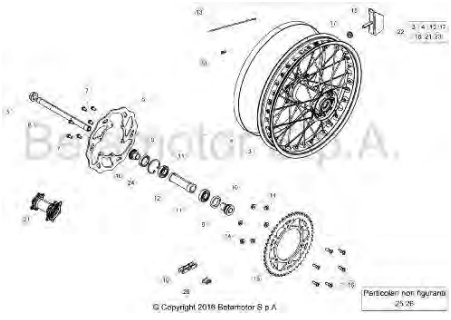

Pag. 53

TAV.43A Carenature-Parafanghi - Mudguards - Carenages-Gardeboues - Verkleidungen-Kotflügeln - Carenados-Guardabarros

Pag. 54

TAV.43B Carenature-Serbatoio-Sella - Fairings-Tank-Saddle - Carenages-Reservoir-Selle - Verkleidungen-Tank-Sattel - Carenados-Deposito-Sillín

Pag. 56

TAV.44 Attrezzatura specifica - Special tools - Outillage spé cial - Spezialwerkzeug - Utillaje especifico

Betamotor S.p.A.

© Copyright 2016 Betamotor S.p.A.

Pag. 58

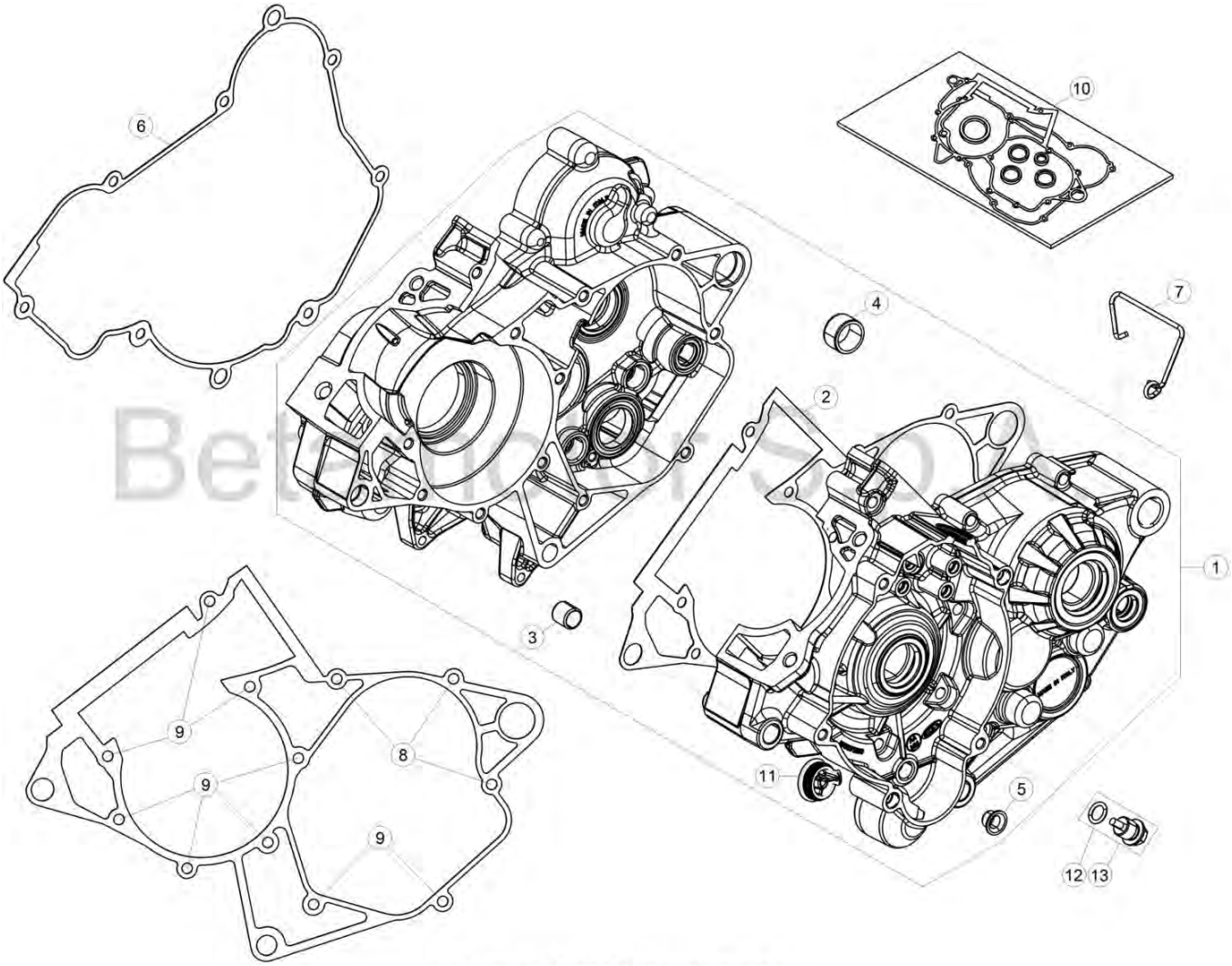

© Copyright 2018 Betamotor S.p.A.

Tav.01A

Pos Loc Pos Ps Pos	Numero Number Numé ro Nú mero Nummer	Q.tà Q.ty Q.té M.ge C.ad	Nota Note Note Nota Anm.	Descrizione	Description	Dé signation	Beschreibung	Descripciò n
1	035.01.000.80.00	1		Carter motore	Crankcase assy	Carter moteur complet	Kurbekgehä use, kompl.	Carter motor completo
2	035.01.003.00.00	1		Guarnizione carter	Crankcase gasket	Joint carter	Dichtung Kurbelwellengehä use	Junta cá rter
3	16.41500.000	2		Grano di riferimento	Dowel	Repè re	Passtift	Centraje
4	006.01.012.00.00	1		Grano di riferimento 17x21.12	Dowel 17x21.12	Repè re 17x21.12	Passtift 17x21.12	Centraje 17x21.12
5	C03.02.001.00.00	1		Boccola 8x10x8	Bush 8x10x8	Moyeu 8x10x8	Bü chse 8x10x8	Buje 8x10x8
6	035.01.009.00.00	1		Guarnizione coperchio	Cover gasket	Joint couvercle	Dichtung Abdeckung	Junta tapa
7	006.01.023.00.00	1		Passacavo	Grommet	Passe-câ ble	Kabeldurchgang	Pasacables
8	11.50360.000	3		Bullone M6x40	Bolt M6x40	Boulon M6x40	Bolzen M6x40	Tornillo M6x40
9	11.05535.000	9		Bullone 6.50 rs ch 8	Bolt 6.50 rs ch 8	Boulon 6.50 rs ch 8	Bolzen 6.50 rs ch 8	Tornillo 6.50 rs ch 8
10	035.01.005.82.00	1		Guarnizioni - Kit	Packings - Kit	Joints - Kit	Dichtungenssatz	Juntas - Kit
10	035.01.035.82.00	1	RACING	Guarnizioni - Kit	Packings - Kit	Joints - Kit	Dichtungenssatz	Juntas - Kit
11	035.01.006.00.59	1		Tappo	Plug	Bouchon	Verschluss	Tapó n
12	10.66164.000	1		Anello Or 11,2x2,5 nbr70 sh	O-Ring 11,2x2,5 nbr70 sh	Bague d' é tanché ité 11,2x2,5	O-Ring 11,2x2,5 nbr70 sh	Anillo OR 11,2x2,5 nbr70 sh
13	006.08.152.80.00	1		Tappo per scarico olio completo	Oil drain plug	Bouchon vidange huile	Oelablassschraube	Tapon vaciado aceite

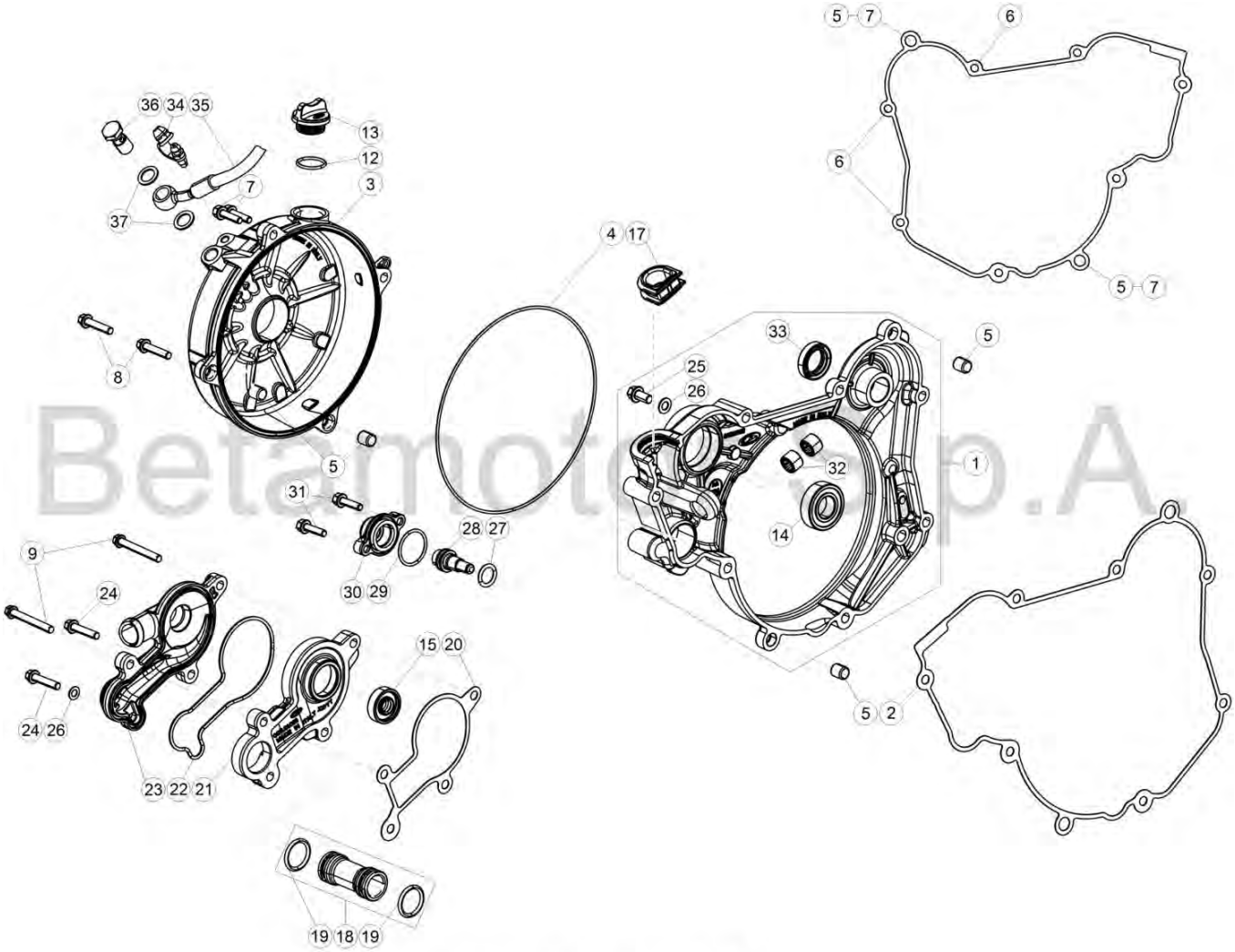

© Copyright 2018 Betamotor S.p.A.

Tav.01B

Pos Loc Pos Ps Pos	Numero Number Numéro Número Nummer	Q.tà Q.ty Q.té M.ge C.ad	Nota Note Note Nota Anm.	Descrizione	Description	Désignation	Beschreibung	Descripciòn
1	035.01.011.80.59	1		Coperchio frizione interno	Inner clutch cover	Couvercle interne d' embrayage	Innerer Kupplungsdeckel	Tapa interior embrague
2	035.01.009.00.00	1		Guarnizione coperchio frizione	Clutch cover gasket	Joint couvercle embrayage	Dichtung Kupplungabdeckung	Junta tapa embrague
3	035.01.012.80.59	1		Coperchio frizione esterno	Outer clutch cover	Couvercle externe d' embrayage	Äußerer Kupplungsdeckel	Tapa exterior embrague
3	035.01.030.80.59	1	RACING	Coperchio frizione	Clutch cover	Couvercle d' embrayage	Kupplungsdeckel	Tapa embrague
4	C02.06.059.00.00	1		Anello di tenuta	Oil seal	Joint spie	Dichtring	Retén de aceite
4	035.01.008.00.59	1	RACING	Guarnizione coperchio	Cover gasket	Joint couvercle	Dichtung Abdeckung	Junta tapa
5	16.36500.000	6		Grano 9x7,2x10	Dowel 9x7,2x10	Goujon 9x7,2x10	Stift 9x7,2x10	Clavija 9x7,2x10
6	11.49070.000	3		Bullone 6x20 ch rs	Bolt 6x20 ch rs	Boulon 6x20 ch rs	Bolzen 6x20 ch rs	Tornillo 6x20 ch rs
7	11.50010.000	4		Bullone M6x25	Bolt M6x25	Boulon M6x25	Bolzen M6x25	Tornillo M6x25
8	11.05535.000	2		Bullone 6.50 rs ch 8	Bolt 6.50 rs ch 8	Boulon 6.50 rs ch 8	Bolzen 6.50 rs ch 8	Tornillo 6.50 rs ch 8
9	11.05485.000	2		Bullone M6x60 rs ch 8	Bolt M6x60 rs ch 8	Boulon M6x60 rs ch 8	Bolzen M6x60 rs ch 8	Tornillo M6x60 rs ch 8
12	10.66321.000	1		Anello OR 17,17x1,78	O-Ring 17,17x1,78	Bague d' étanchéité 17,17x1,78	O-Ring 17,17x1,78	Anillo OR 17,17x1,78
13	026.01.019.80.59	1		Tappo carico olio	Oil filling cap	Bouchon rempl. huile	Öleinfüllstöpsel	Tapón intruducción aceite
13	026.01.025.80.53	1	RACING	Tappo carico olio	Oil filling cap	Bouchon rempl. huile	Öleinfüllstöpsel	Tapón intruducción aceite
14	C06.01.001.00.00	1		Cuscinetto 15.32.9 6002-2RSH C3	Bearing 15.32.9 6002-2RSH C3	Roulement 15.32.9 6002-2RSH C3	Lager 15.32.9 6002-2RSH C3	Cojinete 15.32.9 6002-2RSH C3
15	10.43720.000	1		Anello paraolio 8.24.7	Oil seal 8.24.7	Joint d' étanchéité 8.24.7	Ölschutzring 8.24.7	Retén de aceite 8.24.7
17	026.01.031.80.00	1		Guarnizione asta valvola	Valve stem seal	Joint d' etancheite de tige de soupape	Ventilshaftdichtung	Sello de vastago de valvula
18	026.01.037.80.00	1		Tubo acqua	Water pipe	Tuyau de l' eau	Kühlflüssigkeitsleitung	Tubo agua
19	C02.06.052.00.00	2		Anello OR 17,96x2,62 70 NBR70Sh	O-Ring 17,96x2,62 70 NBR70Sh	Bague d' étanchéité 17,96x2,62 70 NBR70Sh	O-Ring 17,96x2,62 70 NBR70Sh	Anillo OR 17,96x2,62 70 NBR70Sh
20	035.01.024.00.00	1		Guarnizione	Packing	Joint	Dichtung	Junta
21	035.01.021.00.00	1		Corpo pompa acqua	Water pump plunger cylinder	Cylindre de plongeur de pompe eau	Wasserpumpengehäuse	Cuepo bomba agua
22	035.01.023.00.00	1		Anello di tenuta	Oil seal	Joint spie	Dichtring	Retén de aceite
23	035.01.020.00.00	1		Coperchio pompa acqua	Water pump cover	Couvercle pompe à eau	Wasserpumpendeckel	Tapa bomba agua
24	11.50300.000	2		Bullone M6x30 rs ch8	Bolt M6x30 rs ch8	Boulon M6x30 rs ch8	Bolzen M6x30 rs ch8	Tornillo M6x30 rs ch8
25	11.47015.000	1		Bullone M6x12 RS CH8	Bolt M6x12 RS CH8	Boulon M6x12 RS CH8	Bolzen M6x12 RS CH8	Tornillo M6x12 RS CH8
26	27.40495.000	2		Rondella in rame 6.11	Copper washer 6.11	Rondelle en cuivre 6.11	Kupfer U.Scheibe 6.11	Arandela de cobre 6.11
27	10.66296.000	1		Anello OR 12,37.2,62	O-Ring 12,37.2,62	Bague d' étanchéité 12,37.2,62	O-Ring 12,37.2,62	Anillo OR 12,37.2,62
28	026.09.020.00.00	1		Guida molla	Spring guide	Guide ressort	Federfuehrung	Guia de resorte
29	10.66540.000	1		Anello OR 24.2	O-Ring 24.2	Bague d' étanchéité 24.2	O-Ring 24.2	Anillo OR 24.2
30	026.09.025.00.00	1		Coperchio	Cover	Couvercle	Deckel	Tapa
31	11.46401.000	2		Bullone M5x20 RS CH8	Bolt M5x20 RS CH8	Boulon M5x20 RS CH8	Bolzen M5x20 RS CH8	Tornillo M5x20 RS CH8
32	11.22100.000	2		Boccola a rulli 10x14x10	Roller bearing 10x14x10	Douille à roulements 10x14x10	Rollenbuchse 10x14x10	Caja de grasa de rodillos 10x14x10
33	C02.01.039.00.00	1		Anello di tenuta	Oil seal	Joint spie	Dichtring	Retén de aceite
34	28.91050.000	1		Tappo sfiato	Breather plug	Bouchon reniflard	Verschluß Entlüfter	Tapón respiradero
35	035.35.002.00.00	1		Tubo frizione	Clutch tube	Canalisation embrague	Kupplungsrohr	Tubo embrague
36	11.65040.000	1		Bullone forato 10x1 x tubo freno	Special bolt	Boulon 10x1 x tube frein	Hohlschraube F.Bremse	Perno banjo10.1
37	16.50510.000	2		Guarnizione 10x15x1 in rame	Gasket 10x15x1 copper	Joint 10x15x1 cuivre	Dichtung 10x15x1 Kupfer	Junta 10.15.1 (cobre)

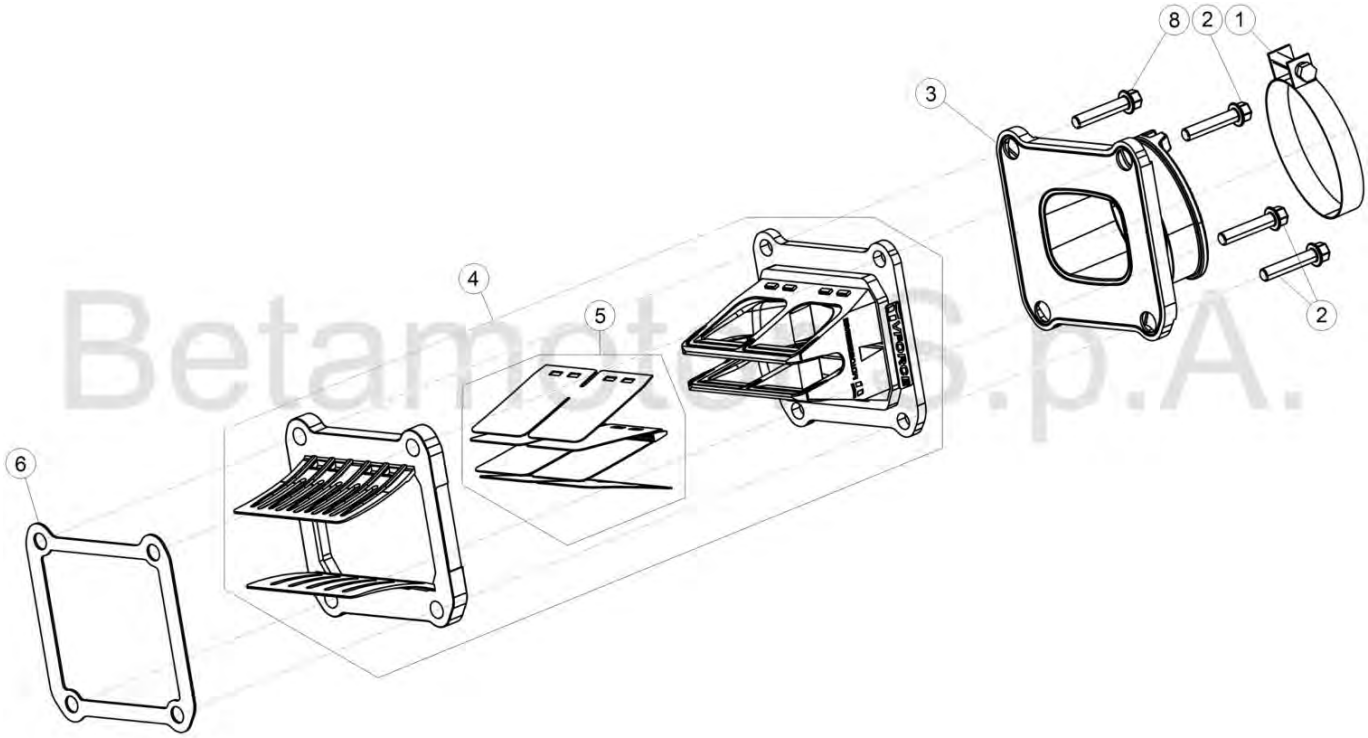

© Copyright 2017 Betamotor S.p.A.

Pos Loc Pos Ps Pos	Numero Number Numé ro Nú mero Nummer	Q.tà Q.ty Q.té M.ge C.ad	Nota Note Note Nota Anm.	Descrizione	Description	Dé signation	Beschreibung	Descripciò n
1	15.14275.000	1		Fascetta 52/12	Clamp 52/12	Collier 52/12	Schelle 52/12	Abrazadera 52/12
2	11.50010.000	3		Bullone M6x25	Bolt M6x25	Boulon M6x25	Bolzen M6x25	Tornillo M6x25
3	035.01.025.00.00	1		Collettore aspirazione	Carburetor inlet duct	Conduit adm. carburateur	Ansaugstutzen Vergaser	Colector Carburador
4	035.01.016.80.00	1		Valvola lamellare	Leaf valve	Pyramide clapets	Lamellenpaket	Vá lvula lá minas
5	035.01.007.82.00	1		Kit lamelle	Plate kit	Kit lamelle	Plä ttchenkit	Kit Laminilla
6	035.01.019.00.00	1		Guarnizione valvola aspirazione	Suction valve gasket	Joint soupape aspir.	Dichtung Einlaßventil	Junta vá lvula aspiraci ó n
8	026.11.035.00.00	1		Vite di sicurezza	Tab screw	Vis de sú reté	Sicherungs-Schraube	Tornillo de seguridad

Tav.02

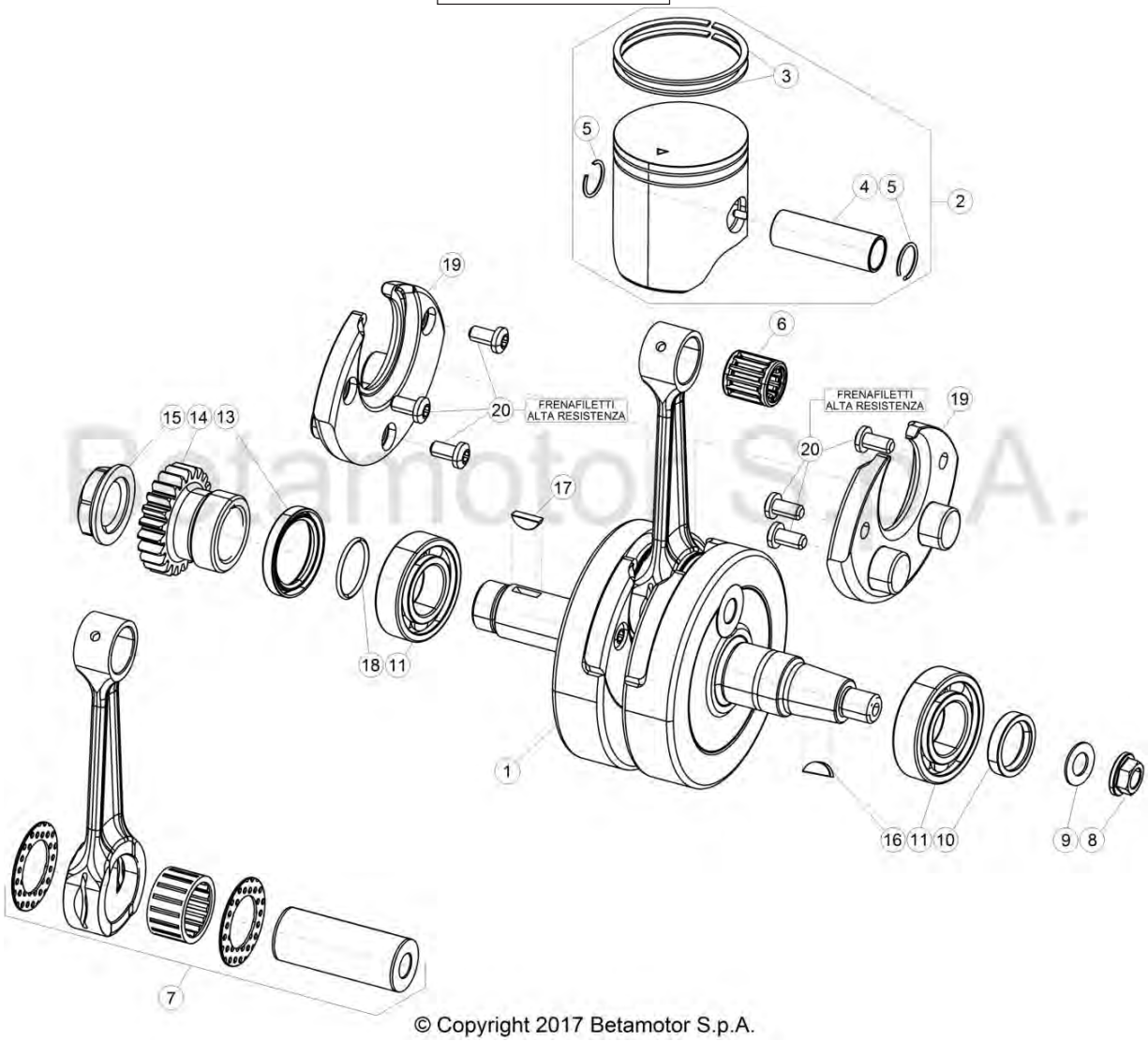

© Copyright 2017 Betamotor S.p.A.

Pos Loc Pos Ps Pos	Numero Number Numé ro Nú mero Nummer	Q.tà Q.ty Q.té M.ge C.ad	Nota Note Note Nota Anm.	Descrizione	Description	Dé signation	Beschreibung	Descripciò n
1	035.02.000.80.00	1		Albero motore completo	Crankshaft, assy.	Arbre moteur complet	Kurbelwelle, komplett	Cigü eñ al completo
2	035.02.019.80.0A	1		Pistone completo - Sel. A	Piston set - Sel. A	Piston compl. - Sé l. A	Kolben, kompl. - Auswahl A	Pistó n, compl. - Sel. A
2	035.02.019.80.0B	1		Pistone completo - Sel. B	Piston set - Sel. B	Piston compl. - Sé l. B	Kolben, kompl. - Auswahl B	Pistó n, compl. - Sel. B
2	035.02.019.80.0C	1		Pistone completo - Sel. C	Piston set - Sel. C	Piston compl. - Sé l. C	Kolben, kompl. - Auswahl C	Pistó n, compl. - Sel. C
3	007.02.041.00.00	2		Segmento pistone	Piston ring	Segment de piston	Kolbendichtring	Aro piston
4	007.02.042.00.00	1		Spinotto	Pin	Axe	Zapfen	Eje
5	007.02.044.00.00	2		Anello ferma spinotto	Piston pin lock ring	Bague de serrage goujon	Bolzenfeststellring	Anillo sujeta pasador
6	007.02.053.00.00	1		Gabbia	Cage	Cage	Lagerkä fig	Jaula
7	035.02.004.80.00	1		Biella completa	Conn.-rod, assy	Bielle compl.	Pleuel, kompl.	Biela compl.
8	13.25010.000	1		Dado M12x1	Nut M12x1	Ecrou M12x1	Mutter M12x1	Tuerca M12x1
9	27.74810.000	1		Rondella elastica	Spring Washer	Rondelle é lastique	Federring	Arandela elá stica
10	C02.01.041.00.00	1		Anello di tenuta 25.35.7	Oil seal 25.35.7	Joint d' é tanché ité 25.35.7	Ölschutzring 25.35.7	Reté n de aceite 25.35.7
11	C06.01.043.00.00	2		Cuscinetto	Bearing	Roulement	Lager	Cojinete
13	10.66020.000	1		Anello di tenuta	Oil seal	Joint d' é tanché ité	Ölschutzring	Reté n de aceite
14	035.03.001.00.00	1		Pignone trasmissione primaria	Main Drive Sprocket	Pignon Transmission Primaire	Primä raantriebsritzel	Piñ ó n Transmisió n Primaria
15	006.03.023.00.00	1		Dado M20X1x5 LH	Nut M20X1x5 LH	Ecrou M20X1x5 LH	Mutter M20X1x5 LH	Tuerca M20X1x5 LH
16	12.46020.000	1		Chiavetta 3x5	Key 3x5	Clavette 3x5	Keil 3x5	Chaveta 3x5
17	12.46151.000	1		Linguetta 4x5 uni 6606	Plate 4x5 uni 6606	Plaquette 4x5 uni 6606	Plä ttchen 4x5 uni 6606	Lengü eta 4x5 uni 6606
18	10.66490.000	1		Anello OR	O-Ring	Bague d' é tanché ité	O-Ring	Anillo OR
19	035.02.003.00.00	2		Inserto albero motore	Crankshaft insert	Elé ment arbre moteur	Einsatz Kurbelwelle	Encaje cigü eñ al
20	C24.91.002.00.00	6		Vite 6.12 TORX	Screw 6.12 TORX	Vis 6.12 TORX	Schraube 6.12 TORX	Tornillo 6.12 TORX

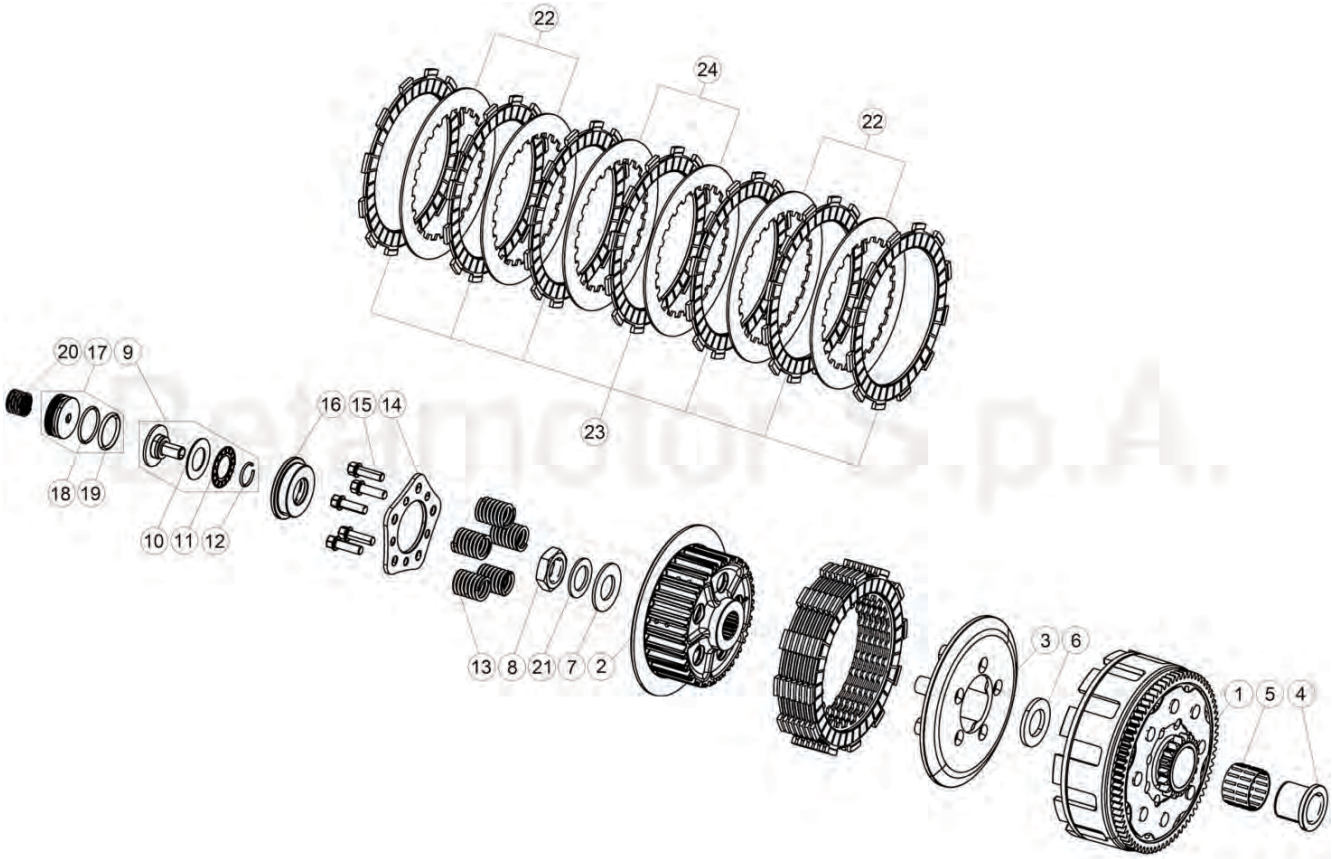

© Copyright 2018 Betamotor S.p.A.

Tav.03

Pos Loc Pos Ps Pos	Numero Number Numéro Número Nummer	Q.tà Q.ty Q.té M.ge C.ad	Nota Note Note Nota Anm.	Descrizione	Description	Désignation	Beschreibung	Descripciòn
1	035.03.027.80.00	1		Campana frizione	Clutch case	Cloche d' embrayage	Kupplungsglocke	Campana de embr.
2	035.03.013.00.00	1		Mozzo frizione	Clutch drum	Moyeu d' embr.	Kupplungstrommel	Tambor de embr.
3	035.03.014.00.00	1		Piattello spingidisco	Spring collar	Godet d' embrayage	Druckteller	Platillo embrague
4	035.03.016.00.00	1		Boccola	Bush	Moyeu	Büchse	Buje
5	006.03.063.00.00	1		Boccola a rulli 26.30.22	Roller bearing 26.30.22	Douille à roulements 26.30.22	Rollenbuchse 26.30.22	Caja de grasa de rodillos 26.30.22
6	035.03.018.00.00	1		Rondella	Washer	Rondelle	U.Scheibe	Arandela
7	27.65891.000	1		Rondella	Washer	Rondelle	U.Scheibe	Arandela
8	006.03.065.00.00	1		Dado M18x1,5 h9	Nut M18x1,5 h9	Ecrou M18x1,5 h9	Mutter M18x1,5 h9	Tuerca M18x1,5 h9
9	035.03.020.80.00	1		Innesto Frizione	Clutch Coupling	Crabot Embrayage	Stabeinklupplung Kupplungskörper	Acople Embrague
10	C06.61.002.00.00	1		Rondella	Washer	Rondelle	U.Scheibe	Arandela
11	C06.39.004.82.00	1		Cuscinetto	Bearing	Roulement	Lager	Cojinete
12	28.24470.000	1		Seeger	Circlip	Circlip	Seeger	Seeger
13	035.03.011.00.00	5		Molla frizione	Clutch spring	Ressort embr.	Kupplg.feder	Muelle embr.
14	035.03.015.00.00	1		Piattello molla	Spring collar	Godet ressort	Druckteller	Platillo muelle
15	11.49070.000	5		Bullone 6x20 ch8 rs	Bolt 6x20 ch8 rs	Boulon 6x20 ch8 rs	Bolzen 6x20 ch8 rs	Tornillo 6x20 ch8 rs
16	035.03.019.00.00	1		Piattello innesto Frizione	Clutch coupling plate	Godet crabot Embrayage	Druckteller Stabeinklupplung Kupplungskörper	Platillo acople embrague
17	035.03.021.80.00	1		Pistone attuatore innesto frizione	Actuator piston, assy.	Piston actionneur complet	Kolben Stellantrieb kpl.	Pistón del actuador completo
18	10.66520.000	1		Anello OR 23,52X1,78 EPDM	O-Ring 23,52X1,78 EPDM	Bague d' étanchéité 23,52X1,78 EPDM	O-Ring 23,52X1,78 EPDM	Anillo OR 23,52X1,78 EPDM
19	10.66510.000	1		Anello OR 21,89X2,62 NBR	O-Ring 21,89X2,62 NBR	Bague d' étanchéité 21,89X2,62 NBR	O-Ring 21,89X2,62 NBR	Anillo OR 21,89X2,62 NBR
20	035.03.022.00.00	1		Molla	Spring	Ressort	Feder	Muelle
21	C19.42.004.00.00	1		Rondella	Washer	Rondelle	U.Scheibe	Arandela
22	035.03.009.00.00	4		Disco condotto	Driven plate	Disque entrainé	Scheibe getrieben	Disco conducido
23	035.03.010.00.00	7		Disco conduttore	Driving plate	Disque menant	Scheibe treibend	Disco conductor
24	035.03.008.00.00	2		Disco condotto	Driven plate	Disque entrainé	Scheibe getrieben	Disco conducido

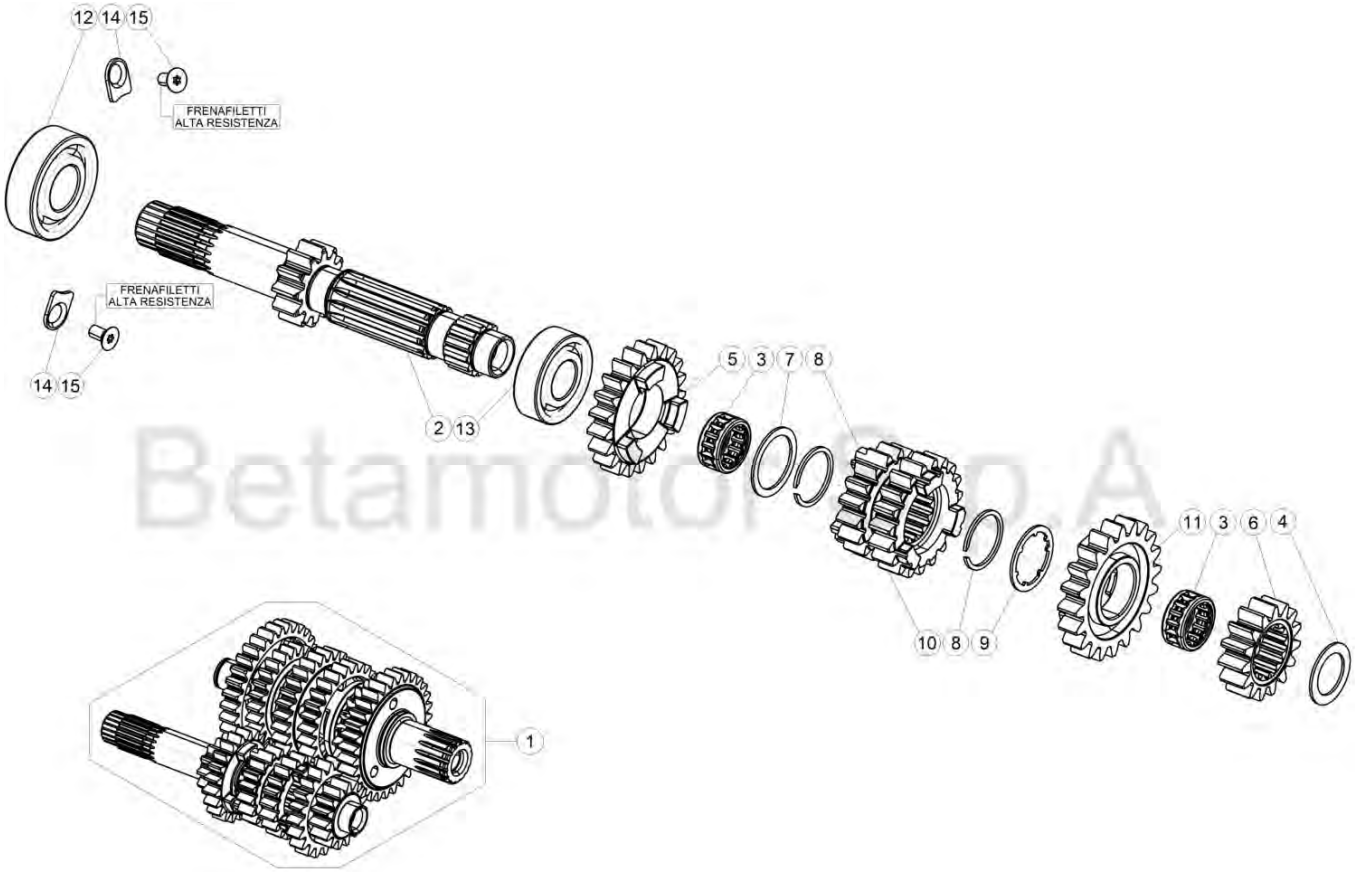

© Copyright 2017 Betamotor S.p.A.

Pos Loc Pos Ps Pos	Numero Number Numé ro Nú mero Nummer	Q.tà Q.ty Q.té M.ge C.ad	Nota Note Note Nota Anm.	Descrizione	Description	Dé signation	Beschreibung	Descripciò n
1	035.04.021.80.00	1		Cambio	Gearbox	Boî te de vitesses	Getriebe komplett	Cambio completo
2	035.04.001.00.00	1		Albero primario cambio	Complete main shaft	Arbre primaire complet	Komplette Hauptwelle	Arbol primario completo
3	16.16580.000	2		Gabbia a rulli 18x22x10	Roller cage 18x22x10	Cage a roul. 18x22x10	Rollenkä fig 18x22x10	Jaula de rod. 18x22x10
4	035.04.016.00.00	1		Rondella rasamento 17.25.1	Thrust washer 17.25.1	Rondelle de buté e 17.25.1	Anlaufscheibe 17.25.1	Arandela distanciadora 17.25.1
5	035.04.002.00.00	1		Ingranaggio quinta sul primario	Fifth gear - mainshaft	Cinquiè me sur le primaire	5. Gang auf antriebswelle	Quinta marcha en el cigü eñ al
6	035.04.007.00.00	1		Ingranaggio seconda sul primario	Second gear - mainshaft	Deuxiè me sur le primaire	2. Gang auf abtriebswelle	Segunda marcha en el cigü eñ al primario
7	C19.04.004.00.00	1		Rondella 22.28.1	Washer 22.28.1	Rondelle 22.28.1	U.Scheibe 22.28.1	Arandela 22.28.1
8	C01.31.005.00.00	2		Anello d' arresto SW 22.1,2	Check ring SW 22.1,2	Bague d' arrê t SW 22.1,2	Sicherungsring SW 22.1,2	Anillo de bloqueo SW 22.1,2
9	035.04.005.00.00	1		Rondella 22.26.1	Washer 22.28.1	Rondelle 22.28.1	U.Scheibe 22.28.1	Arandela 22.28.1
10	035.04.004.00.00	1		Ingranaggio terza e quarta sul primario	Third and fourth gear - mainshaft	Troisiè me et quatriè me sur le primaire	3. Gang Und 4. Gang auf antriebswelle	Tercera y Cuarta marcha en el cigü eñ al primario
11	035.04.006.00.00	1		Ingranaggio sesta sul primario	6th gear - mainshaft	Sixiè me sur le primaire	6. Gang auf antriebswelle	Sexsta marcha en el cigü eñ al
12	12.98001.000	1		Cuscinetto 20.42.12	Bearing 20.42.12	Roulement 20.42.12	Lager 20.42.12	Cojinete 20.42.12
13	C06.01.036.00.00	1		Cuscinetto	Bearing	Roulement	Lager	Cojinete
14	006.01.019.00.09	2		Piastrina fissaggio cuscinetto	Bearing securing plate	Plaquette fix. roulement	Befestigugnsplatte Lager	Placa fij. cojinete
15	31.30085.000	2		Vite TORX S.10 Inox	Screw TORX S.10 Inox	Vis TORX S.10 Inox	Schraube TORX S.10 Inox	Tornillo TORX S.10 Inox

Tav.04B

© Copyright 2017 Betamotor S.p.A.

Pos Loc Pos Ps Pos	Numero Number Numé ro Nú mero Nummer	Q.tà Q.ty Q.té M.ge C.ad	Nota Note Note Nota Anm.	Descrizione	Description	Dé signation	Beschreibung	Descripciò n
1	035.04.020.80.00	1		Albero secondario cambio	Counter shaft	Arbre secondaire	Nebengetriebewelle	Eje secundario
2	10.66620.000	1		Anello OR 25.12.1,78	O-Ring 25,12.1,78	Bague d' é tanché ité 25,12.1,78	O-Ring 25,12.1,78	Anillo OR 25,12.1,78
3	006.04.040.00.00	1		Distanziale	Spacer	Entretoise	Distanzstü ck	Distanciador
4	006.04.050.00.00	1		Pignone Z=13	Pinion Z=13	Pignon Z=13	Ritzel Z=13	Piñ ó n Z=13
5	28.25530.000	1		Seeger AS 25.2	Circlip AS 25.2	Circlip AS 25.2	Seeger AS 25.2	Seeger AS 25.2
6	11.22845.000	3		Gabbia a rulli 22x26x10	Roller cage 22x26x10	Cage a roul. 22x26x10	Rollenkä fig 22x26x10	Jaula de rod. 22x26x10
7	035.04.009.00.00	1		Ingranaggio seconda sul secondario	Second gear - layshaft	Deuxiè me sur le secondaire	2. Gang auf Vorgelegewelle	Segunda marcha en el cigü eñ al sec.
8	035.04.003.00.00	3		Rondella	Washer	Rondelle	U.scheibe	Arandela
9	C01.31.008.00.00	3		Anello d' arresto SW24	Check ring SW24	Bague d' arrê t SW24	Sicherungsring SW24	Anillo de bloqueo SW24
10	035.04.019.00.00	1		Ingranaggio sesta sul secondario	6th gear - layshaft	Sixiè me sur le secondaire	6. Gang auf Vorgelegewelle	Sexsta marcha en el cigü eñ al sec.
11	035.04.012.00.00	1		Ingranaggio quarta sul secondario	Fourth gear - layshaft	Quatriè me sur le secondaire	4. Gang auf Vorgelegewelle	Cuarta marcha en el cigü eñ al sec.
12	035.04.011.00.00	1		Ingranaggio terza sul secondario	Third gear - layshaft	Troisiè me sur le secondaire	3. Gang auf Vorgelegewelle	Tercera marcha en el cigü eñ al sec.
13	035.04.018.00.00	1		Ingranaggio quinta sul secondario	Fifth gear - layshaft	Cinquiè me sur le secondaire	5. Gang auf Vorgelegewelle	Quinta marcha en el cigü eñ al sec.
14	27.73635.000	1		Rondella spessore C72 20.30.1	Thrust washer C72 20.30.1	Rondelle de buté e C72 20.30.1	Anlaufscheibe C72 20.30.1	Arandela distanciadora C72 20.30.1
15	11.22835.000	1		Gabbia a rulli 20x24x10	Roller cage 20x24x10	Cage a roul. 20x24x10	Rollenkä fig 20x24x10	Jaula de rod. 20x24x10
16	035.04.014.00.00	1		Ingranaggio prima sul secondario	First gear - layshaft	Premiè re sur le secondaire	1. Gang auf Vorgelegewelle	Primera marcha en el cigü eñ al
17	006.04.032.00.00	1		Rondella rasamento 17x30x1	Thrust washer 17x30x1	Rondelle de buté e 17x30x1	Anlaufscheibe 17x30x1	Arandela distanciadora 17x30x1
18	12.95610.000	1		Cuscinetto	Bearing	Roulement	Lager	Cojinete
19	10.66020.000	1		Anello paraolio 32.45.7 bsc	Oil seal 32.45.7 bsc	Pare-huile 32.45.7 bsc	Dichtring 32.45.7 bsc	Sello de lub 32.45.7 bsc

Tav.05

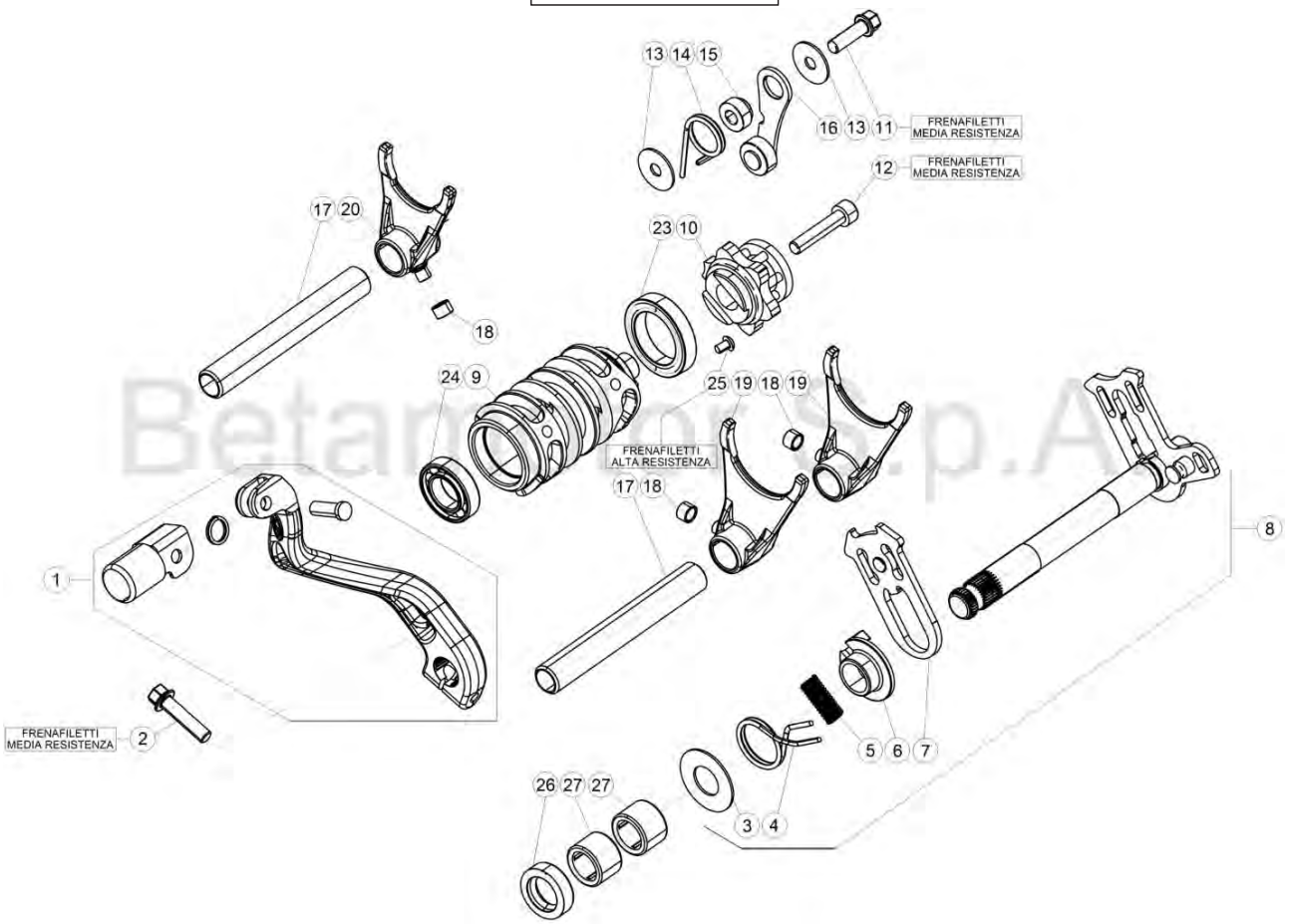

© Copyright 2017 Betamotor S.p.A.

Pos Loc Pos Ps Pos	Numero Number Numé ro Nú mero Nummer	Q.tà Q.ty Q.té M.ge C.ad	Nota Note Note Nota Anm.	Descrizione	Description	Dé signation	Beschreibung	Descripciò n
1	006.05.000.80.00	1		Leva cambio	Gear change lever	Levier comm. chang. vit.	Schalthebel	Palanca cambio
1	006.05.000.80.59	1	RACING	Leva cambio	Gear change lever	Levier comm. chang. vit.	Schalthebel	Palanca cambio
2	11.50010.000	1		Bullone M6x25	Bolt M6x25	Boulon M6x25	Bolzen M6x25	Tornillo M6x25
3	27.63020.000	1		Rondella rasamento 14x30x1	Thrust washer 14x30x1	Rondelle de buté e 14x30x1	Anlaufscheibe 14x30x1	Arandela distanciadora 14x30x1
4	006.05.017.00.00	1		Molla ritorno comando cambio	Gearchange return spring	Ressort de retour comm. ch.ge vit.	Rü ckstellfeder schaltung	Muelle de retorno cambio
5	16.92911.000	1		Guida molla	Spring guide	Guide ressort	Federfuehrung	Guia de resorte
6	006.05.016.00.00	1		Molla 0,8MM	Spring 0,8MM	Ressort 0,8MM	Feder 0,8MM	Muelle 0,8MM
7	006.05.014.80.00	1		Ventaglio mobile	Movable pawl	Eventail mobile	Schaltautomat	Abanico mó vil
8	035.05.000.80.00	1		Albero comando cambio compl.	Gearshift shaft, assy.	Arbre de vitesse compl.	Schaltwelle kpl.	Eje mando cambio completo
9	035.05.006.00.00	1		Camma cambio	Selector drum	Barillet de sé lection de boî te de vit.	Schaltwalze	Leva de la caja de cambios
10	029.05.001.80.00	1		Camma arresto marce compl.	Gear stopper cam, assy.	Came buté e vitesses complet	Gangsperrnocken kpl.	Leva parada marchas completo
11	11.49070.000	1		Bullone 6x20 ch rs	Bolt 6x20 ch rs	Boulon 6x20 ch rs	Bolzen 6x20 ch rs	Tornillo 6x20 ch rs
12	31.45000.000	1		Vite TCCE 6.30	Screw TCCE 6.30	Vis TCCE 6.30	Schraube TCCE 6.30	Tornillo TCCE 6.30
13	27.42000.100	2		Rondella 6x20.1,0	Washer 6x20.1,0	Rondelle 6x20.1,0	U.Scheibe 6x20.1,0	Arandela 6x20.1,0
14	035.05.007.00.00	1		Molla	Spring	Ressort	Feder	Muelle
15	029.05.054.00.00	1		Disatnziale leva arresto marce	Gear stop lever spacer	Entretoise levier arrê t vit.	Distanzstü ck Gangstopphebel	Distanciador palanca arresto vel.
16	029.05.050.80.00	1		Leva arresto marce compl.	Gear stop lever, assy.	Levier arrê t vit. compl.	Gangstopphebel kpl.	Palanca arresto vel. compl.
17	026.05.025.00.00	2		Perno forchetta	Spindle, fork	Axe de fourche	Schaltgabelstift	Perno de la horquilla
18	006.05.027.00.00	3		Boccola 6x8.5,2.	Bush 6x8.5,2.	Moyeu 6x8.5,2.	Bü chse 6x8.5,2.	Buje 6x8.5,2.
19	035.05.004.00.00	2		Forchetta comando cambio	Gear selector fork	Fourchette sé lect. chang. de vit.	Schaltgabel	Horquilla selector cambio
20	035.05.005.00.00	1		Forchetta comando cambio	Gear selector fork	Fourchette sé lect. chang. de vit.	Schaltgabel	Horquilla selector cambio
23	12.93405.000	1		Cuscinetto 61805-2rs1	Bearing 61805-2rs1	Roulement 61805-2rs1	Lager 61805-2rs1	Cojinete 61805-2rs1
24	12.93840.000	1		Cuscinetto 15.28.7	Bearing 15.28.7	Roulement 15.28.7	Lager 15.28.7	Cojinete 15.28.7
25	31.30084.000	1		Vite TORX S.8	Screw TORX S.8	Vis TORX S.8	Schraube TORX S.8	Tornillo TORX S.8
26	10.52012.000	1		Anello paraolio 14.24,6	Oil seal 14.24,6	Joint d' é tanché ité 14.24,6	Ölschutzring 14.24,6	Reté n de aceite 8.24.7
27	11.22320.000	2		Boccola a rulli	Roller bearing	Douille à roulements	Rollenbuchse	Caja de grasa de rodillos

Betamotor S.p.A.

© Copyright 2018 Betamotor S.p.A.

Pos Loc Pos Ps Pos	Numero Number Numéro Número Nummer	Q.tà Q.ty Q.té M.ge C.ad	Nota Note Note Nota Anm.	Descrizione	Description	Désignation	Beschreibung	Descripciòn
1	035.06.009.80.00	1		Leva messa in moto	Start. lever	Levier du démarrage	Kickstarterhebel	Palanca de arranque
2	035.06.002.00.00	1		Ingranaggio avviamento	Starter gear	Engrenage du démarreur	Starterzahnrad	Engranaje puesta en marcha
3	035.06.001.00.00	1		Albero messa in moto	Kickstarter shaft	Arbre du démarreur	Starterwelle	Eje puesta en marcha
4	035.06.006.80.00	1		Ingranaggio rinvio messa in moto	Kickstart idler gear	Pignon de renvoi de démarr.	Zwinschenrad starter	Engr. de reenvio arranque
5	31.96827.000	1		Vite speciale M8X26	Special screw M8X26	Vis spéciale M8X26	Spezialschraube M8X26	Tornillo especial M8X26
6	006.06.008.00.00	1		Rondella	Washer	Rondelle	U.Scheibe	Arandela
7	035.06.003.00.00	1		Distanziale	Spacer	Entretoise	Distanzstück	Distanciador
8	006.06.013.00.00	1		Molla richiamo albero messa in moto	Return spring kickstarter shaft	Ressort de rappel arbre du démarreur	Rückzugsfeder Starterwelle	Muelle de retorno eje puesta en marcha
9	C19.04.002.00.00	1		Rondella	Washer	Rondelle	U.Scheibe	Arandela
10	C01.23.001.00.00	2		Anello di fermo 17x1	Check ring 17x1	Bague d'arrêt 17x1	Sicherungsring 17x1	Anillo de bloqueo 17x1
11	C19.04.003.00.00	2		Rondella	Washer	Rondelle	U.Scheibe	Arandela
13	006.06.016.00.00	1		Rampa messa in moto	Kickstart ramp	Rampe de démarrage	Starterrampe	Rampa para el arranque
14	035.06.004.00.00	1		Innesto messa in moto	Kickstart contact tag	Cosse de démarr.	Stecker starter	Toma de contacto arranque
15	11.49070.000	1		Bullone 6x20 ch rs	Bolt 6x20 ch rs	Boulon 6x20 ch rs	Bolzen 6x20 ch rs	Tornillo 6x20 ch rs
16	006.06.015.00.00	1		Molla	Spring	Ressort	Feder	Muelle
17	27.71220.000	1		Rondella spess. 17.25	Washer 15x25 17.25	Rondelle epaisseur 15x25 17.25	Scheibe 15x25 17.25	Arandela 15x25 17.25

STANDARD

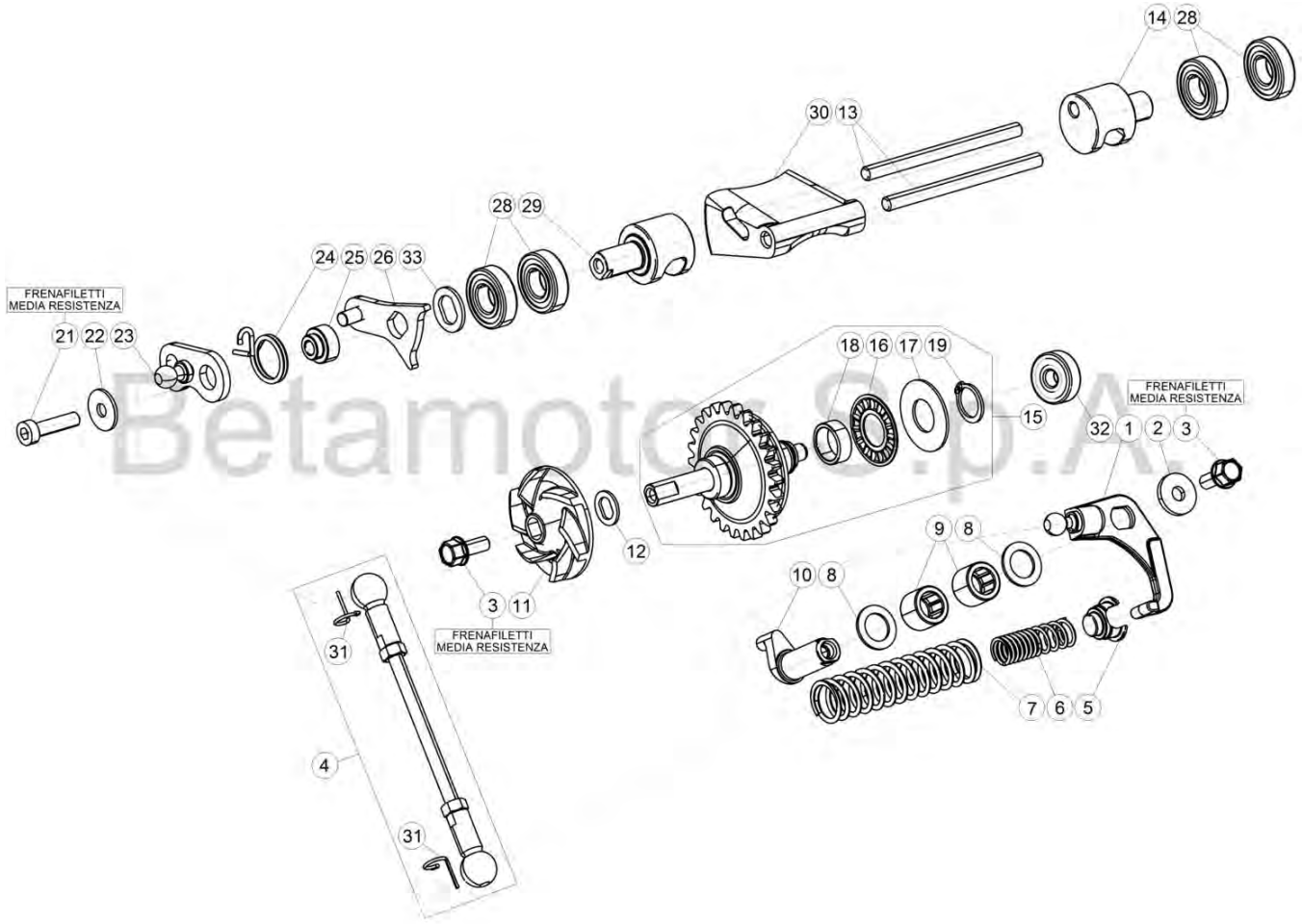

Betamotor S.p.A.

© Copyright 2018 Betamotor S.p.A.

Tav.09

Pos Loc Pos Ps Pos	Numero Number Numé ro Nú mero Nummer	Q.tà Q.ty Q.té M.ge C.ad	Nota Note Note Nota Anm.	Descrizione	Description	Dé signation	Beschreibung	Descripciò n
								STANDARD
1	026.09.013.80.00	1		Bilanciere compl.	Rocker arm assy	Culbuteur compl.	Kipphebel kpl.	Balancí n compl.
2	C16.02.001.00.00	1		Rondella 5.15.2	Washer 5.15.2	Rondelle 5.15.2	U.Scheibe 5.15.2	Arandela 5.15.2
3	11.46251.000	2		Bullone flangiato M5x12	Head Flanged bolt M5x12	Boulon Bridé M5x12	Bundbolzen M5x12	Buló n con Brida M5x12
4	026.09.015.80.00	1		Asta comando valvola	Valve control rod	Tige de commande soupape	Ventilsteuerungsstab	Varilla mando vá lvula
5	026.09.017.00.00	1		Guida molla	Spring guide	Guide ressort	Federfuehrung	Guia de resorte
6	035.09.010.00.00	1		Molla	Spring	Ressort	Feder	Muelle
7	026.09.022.00.00	1		Molla regolazione	Adjusting spring	Ressort de ré glage	Feder, Einstell	Muelle de regul.
8	27.58400.000	2		Rondella spessore 10.16.1	Thrust washer 10.16.1	Rondelle de buté e 10.16.1	Anlaufscheibe 10.16.1	Arandela distanciadora 10.16.1
9	11.22100.000	2		Boccola a rulli 10x14x10	Roller bearing 10x14x10	Douille à roulements 10x14x10	Rollenbuchse 10x14x10	Caja de grasa de rodillos 10x14x10
10	026.09.011.00.00	1		Leva controllo	Control Lever	Levier De Commande	Steuerhebel	Palanca Control
11	006.09.000.00.00	1		Girante pompa	Rotor	Roue de pompe	Wasserpumpenrad	Rotor de la bomba
12	006.09.012.00.00	1		Rondella	Washer	Rondelle	U.Scheibe	Arandela
13	035.09.004.00.00	2		Perno valvola di scarico	Exhaust valve pin	Pivot soupape d' é chapp.	Stift Auslassventil	Perno vá lvula de descarga
14	035.09.005.00.00	1		Valvola BOOSTER Sx	BOOSTER valve L.H.	Soupape BOOSTER G.	Auslass BOOSTER L.	Vá lvula BOOSTER izq.
15	035.09.000.80.00	1		Unità centrifuga	Centrifugal unit	Unité centrifuge	Zentrifugaleinheit	Unidad centrí fuga
16	16.11512.000	1		Gabbia assiale a rullini	Axial needle collar	Cage à aiguilles axiale	Axial-Nadelkranz	Jaula de agujas del cojinete
17	27.56400.000	1		Ralla	Washer	Rondelle	Scheibe	Arandela
18	026.09.003.00.00	1		Distanziale	Spacer	Entretoise	Distanzstü ck	Distanciador
19	28.22760.000	1		Seeger A12	Circlip A12	Circlip A12	Seeger A12	Seeger A12
21	31.30015.000	1		Vite a brugola 5x20	Allen screw 5x20	Vis à 6 pans 5x20	Sechskantschraube 5x20	Tornillo a llave allen 5x20
22	27.36500.000	1		Rondella Ø5	Washer Ø5	Rondelle Ø5	U.Scheibe Ø5	Arandela Ø5
23	026.09.042.85.00	1		Leva comando	Operating lever	Levier commande	Betaetigungshebel	Palanca de mando
24	026.09.046.00.00	1		Molla	Spring	Ressort	Feder	Muelle
25	026.09.044.00.00	1		Distanziale	Spacer	Entretoise	Distanzstü ck	Distanciador
26	035.09.007.85.00	1		Leva fine corsa	Travel limit lever	Levier fin de course	Endanschlaghebel	Palanca final de carrera
28	12.93410.000	4		Cuscinetto	Bearing	Roulement	Lager	Cojinete
29	035.09.006.00.00	1		Valvola BOOSTER Dx	BOOSTER valve R.H.	Soupape BOOSTER D.	Auslass BOOSTER R.	Vá lvula BOOSTER der.
30	035.09.003.00.00	1		Valvola di scarico	Exhaust valve	Soupape d' é chapp.	Auslassventil	Vá lvula de descarga
31	C21.31.001.00.00	2		Molla sicurezza	Locking spring	Ressort surete	Sicherungsfeder	Resorte de seguridad
32	12.93387.000	1		Cuscinetto 6.19.6	Bearing 6.19.6	Roulement 6.19.6	Lager 6.19.6	Cojinete 6.19.6
33	026.09.047.00.00	1		Distanziale	Spacer	Entretoise	Distanzstü ck	Distanciador

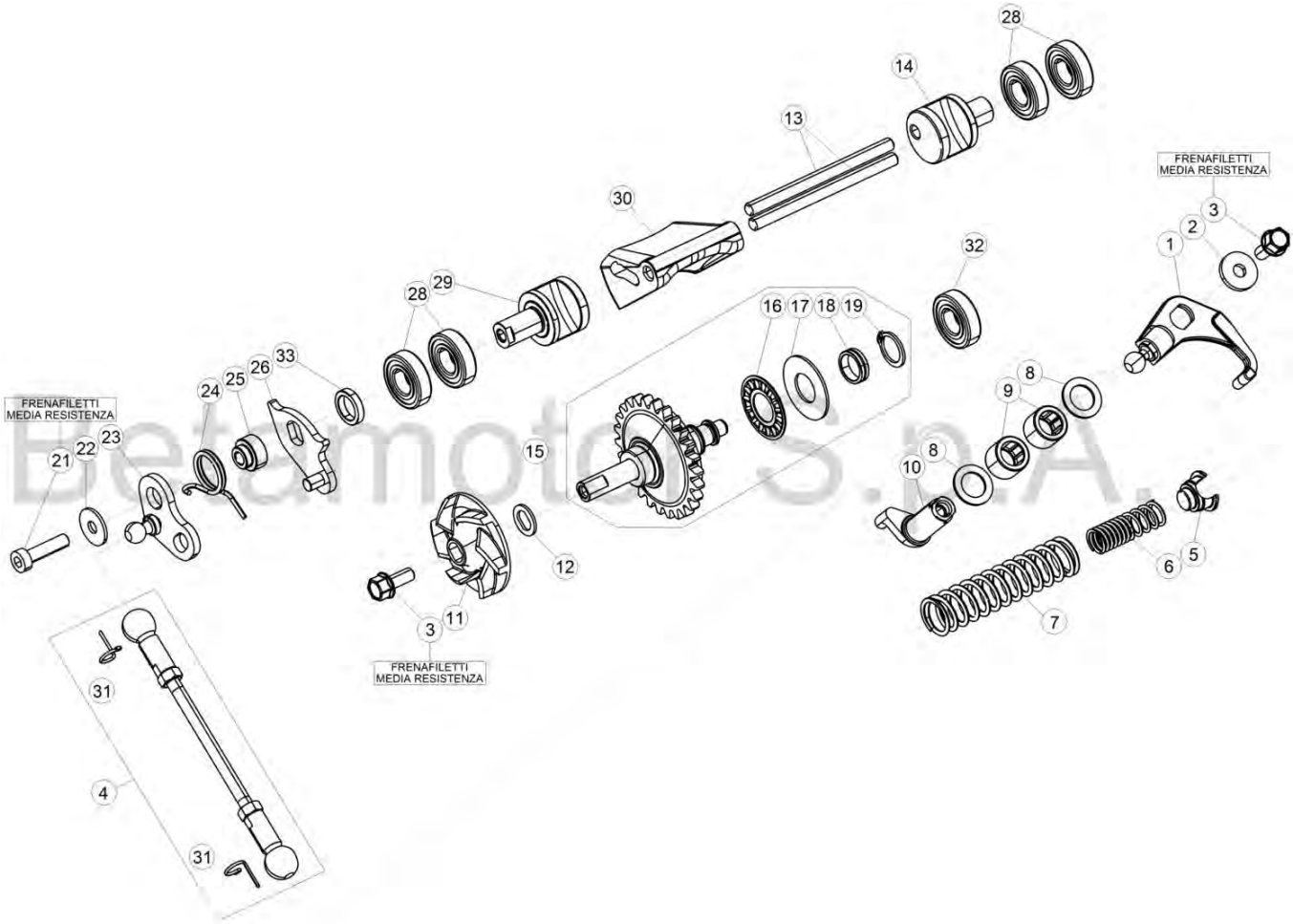

© Copyright 2018 Betamotor S.p.A.

Tav.09

Pos Loc Pos Ps Pos	Numero Number Numé ro Nú mero Nummer	Q.tà Q.ty Q.té M.ge C.ad	Nota Note Note Nota Anm.	Descrizione	Description	Dé signation	Beschreibung	Descripciò n
								RACING
1	035.09.022.80.00	1		Bilanciere compl.	Rocker arm assy	Culbuteur compl.	Kipphebel kpl.	Balancí n compl.
2	C16.02.001.00.00	1		Rondella 5.15.2	Washer 5.15.2	Rondelle 5.15.2	U.Scheibe 5.15.2	Arandela 5.15.2
3	11.46251.000	2		Bullone flangiato M5x12	Head Flanged bolt M5x12	Boulon Bridé M5x12	Bundbolzen M5x12	Buló n con Brida M5x12
4	026.09.015.80.00	1		Asta comando valvola	Valve control rod	Tige de commande soupape	Ventilsteuerungsstab	Varilla mando vá lvula
5	026.09.017.00.00	1		Guida molla	Spring guide	Guide ressort	Federfuehrung	Guia de resorte
6	035.09.010.00.00	1		Molla ausiliaria	Auxiliary spring	Ressort auxiliaire	Wippenfeder	Muelle suplente
7	026.09.022.00.00	1		Molla regolazione	Adjusting spring	Ressort de ré glage	Feder, Einstell	Muelle de regul.
8	27.58400.000	2		Rondella spessore 10.16.1	Thrust washer 10.16.1	Rondelle de buté e 10.16.1	Anlaufscheibe 10.16.1	Arandela distanciadora 10.16.1
9	11.22100.000	2		Boccola a rulli 10x14x10	Roller bearing 10x14x10	Douille à roulements 10x14x10	Rollenbuchse 10x14x10	Caja de grasa de rodillos 10x14x10
10	026.09.011.00.00	1		Leva controllo	Control Lever	Levier De Commande	Steuerhebel	Palanca Control
11	006.09.000.00.00	1		Girante pompa	Rotor	Roue de pompe	Wasserpumpenrad	Rotor de la bomba
12	006.09.012.00.00	1		Rondella	Washer	Rondelle	U.Scheibe	Arandela
13	035.09.004.00.00	2		Perno valvola di scarico	Exhaust valve pin	Pivot soupape d' é chapp.	Stift Auslassventil	Perno vá lvula de descarga
14	035.09.011.00.00	1		Valvola BOOSTER	BOOSTER valve	Soupape BOOSTER	Auslass BOOSTER	Vá lvula BOOSTER
15	035.09.015.80.00	1		Centrifuga	Centrifugal unit	Unité centrifuge	Zentrifugaleinheit	Unidad centrí fuga
16	16.11512.000	1		Gabbia assiale a rullini	Axial needle collar	Cage à aiguilles axiale	Axial-Nadelkranz	Jaula de agujas del cojinete
17	27.56400.000	1		Ralla	Washer	Rondelle	Scheibe	Arandela
18	035.09.017.00.00	1		Distanziale	Spacer	Entretoise	Distanzstü ck	Distanciador
19	28.22760.000	1		Seeger A12	Circlip A12	Circlip A12	Seeger A12	Seeger A12
21	31.30015.000	1		Vite a brugola 5x20	Allen screw 5x20	Vis à 6 pans 5x20	Sechskantschraube 5x20	Tornillo a llave allen 5x20
22	27.36500.000	1		Rondella Ø 5	Washer Ø 5	Rondelle Ø 5	U.Scheibe Ø 5	Arandela Ø 5
23	035.09.020.85.00	1		Leva comando	Operating lever	Levier commande	Betaetigungshebel	Palanca de mando
24	035.09.025.00.00	1		Molla	Spring	Ressort	Feder	Muelle
25	026.09.044.00.00	1		Distanziale	Spacer	Entretoise	Distanzstü ck	Distanciador
26	035.09.019.85.00	1		Leva fine corsa	Travel limit lever	Levier fin de course	Endanschlaghebel	Palanca final de carrera
28	12.93410.000	4		Cuscinetto	Bearing	Roulement	Lager	Cojinete
29	035.09.012.00.00	1		Valvola BOOSTER	BOOSTER valve	Soupape BOOSTER	Auslass BOOSTER	Vá lvula BOOSTER
30	035.09.013.00.00	1		Valvola di scarico	Exhaust valve	Soupape d' é chapp.	Auslassventil	Vá lvula de descarga
31	C21.31.001.00.00	2		Molla sicurezza	Locking spring	Ressort surete	Sicherungsfeder	Resorte de seguridad
32	12.93387.000	1		Cuscinetto 6.19.6	Bearing 6.19.6	Roulement 6.19.6	Lager 6.19.6	Cojinete 6.19.6
33	026.09.047.00.00	1		Distanziale	Spacer	Entretoise	Distanzstü ck	Distanciador

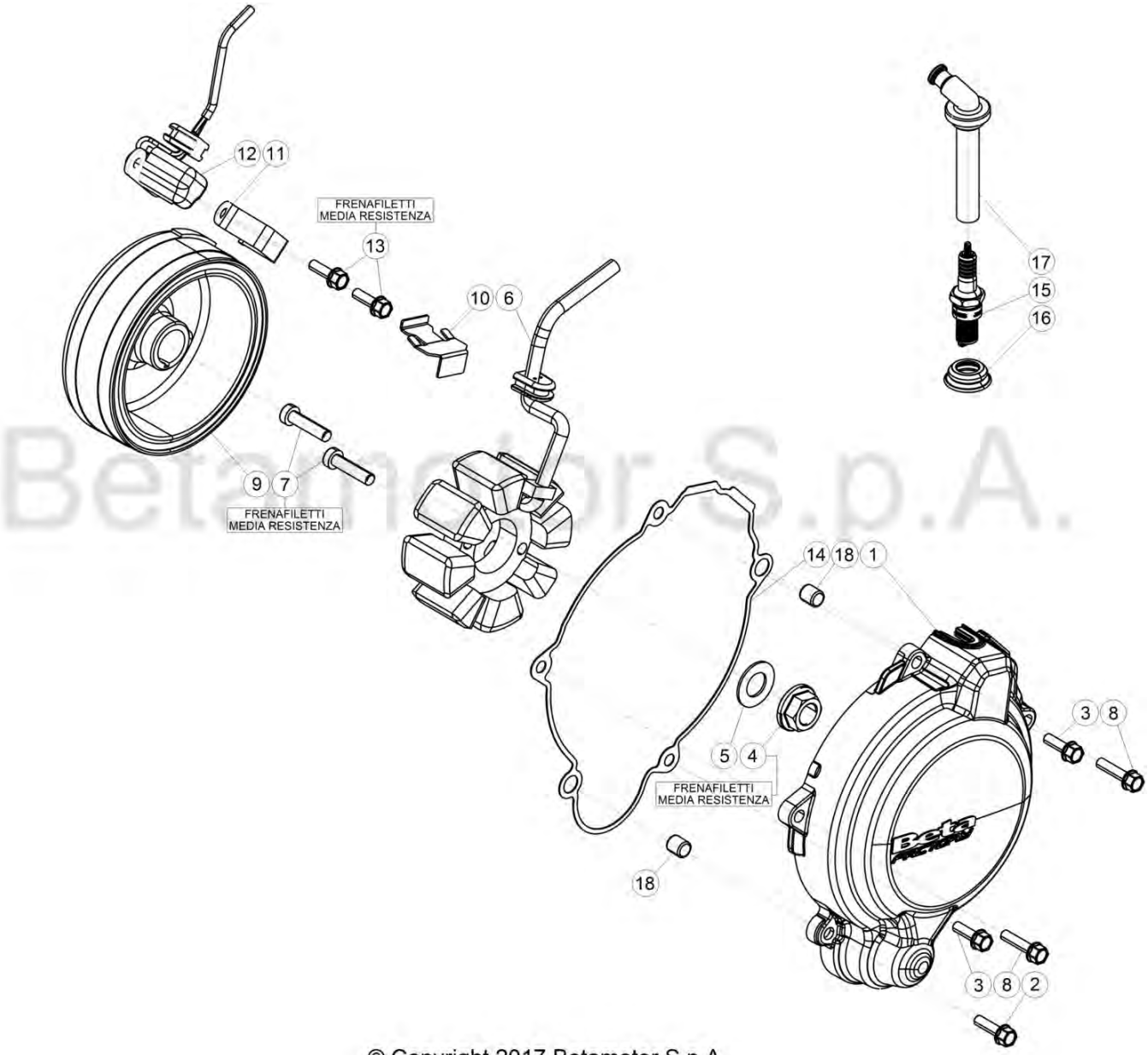

Betamotor S.p.A.

© Copyright 2017 Betamotor S.p.A.

Tav.10

Pos Loc Pos Ps Pos	Numero Number Numé ro Nú mero Nummer	Q.tà Q.ty Q.té M.ge C.ad	Nota Note Note Nota Anm.	Descrizione	Description	Dé signation	Beschreibung	Descripciò n
1	035.01.014.80.59	1		Coperchio volano completo	Flywheel cover	Carter volant	Schwungraddeckel	Tapa volante
2	11.50010.000	1		Bullone M6x25	Bolt M6x25	Boulon M6x25	Bolzen M6x25	Tornillo M6x25
3	11.49070.000	2		Bullone 6x20 ch rs	Bolt 6x20 ch rs	Boulon 6x20 ch rs	Bolzen 6x20 ch rs	Tornillo 6x20 ch rs
4	13.25010.000	1		Dado M12x1	Nut M12x1	Ecrou M12x1	Mutter M12x1	Tuerca M12x1
5	27.74810.000	1		Rondella elastica	Spring Washer	Rondelle é lastique	Federring	Arandela elá stica
6	006.10.020.00.00	1		Statore	Backplate	Stator	Ankerplatte	Estator
7	31.48507.000	2		Vite tcce testa ribassata M6x25	Screw tcce, shallow head M6x25	Vis tcce à tê te basse M6x25	Schraube tcce senkkopf M6x25	Tornillo tcce de cabeza rebajada M6x25
8	11.50355.000	2		Bullone M6x35 RC CH 8	Bolt M6x35 RC CH 8	Boulon M6x35 RC CH 8	Bolzen M6x35 RC CH 8	Buló n M6x35 RC CH 8
9	006.10.010.00.00	1		Rotore	Rotor	Rotor	Rotor	Rotor
10	006.01.054.00.00	1		Piastrina	Plate	Plaquette	Plä ttchen	Placa
11	035.10.004.00.00	1		Piastra ritegno	Retaining plate	Plaque retenue	Haltblech	Placa de retenció n
12	026.10.003.00.00	1		Pick up	Pick-up	Capteur	Pick-up	Pick-up
13	11.46360.000	2		Bullone flangiato M5x16 RS CH8	Head Flanged bolt M5x16 RS CH8	Boulon Bridé M5x16 RS CH8	Bundbolzen M5x16 RS CH8	Buló n con Brida M5x16 RS CH8
14	035.01.015.00.00	1		Guarnizione coperchio volano	Alternator cover gasket	Garniture couvercle alternateur	Alternatordeckeldichtung	Junta tapa alternador
15	12.25126.000	1		Candela	Spark plug	Bougie	Zü ndkerze	Bujia
16	026.10.012.00.00	1		Guarnizione candela	Spark plug gasket	Joint bougie	Zü ndkerzendichtung	Junta bujia
17	27.13514.000	1		Raccordo candela	Spark plug joint	Raccord bougie	Verbindung Zü ndkerze	Bujia
18	16.36500.000	2		Grano di riferimento 9.10	Dowel 9.10	Repè re 9.10	Passtift 9.10	Centraje 9.10

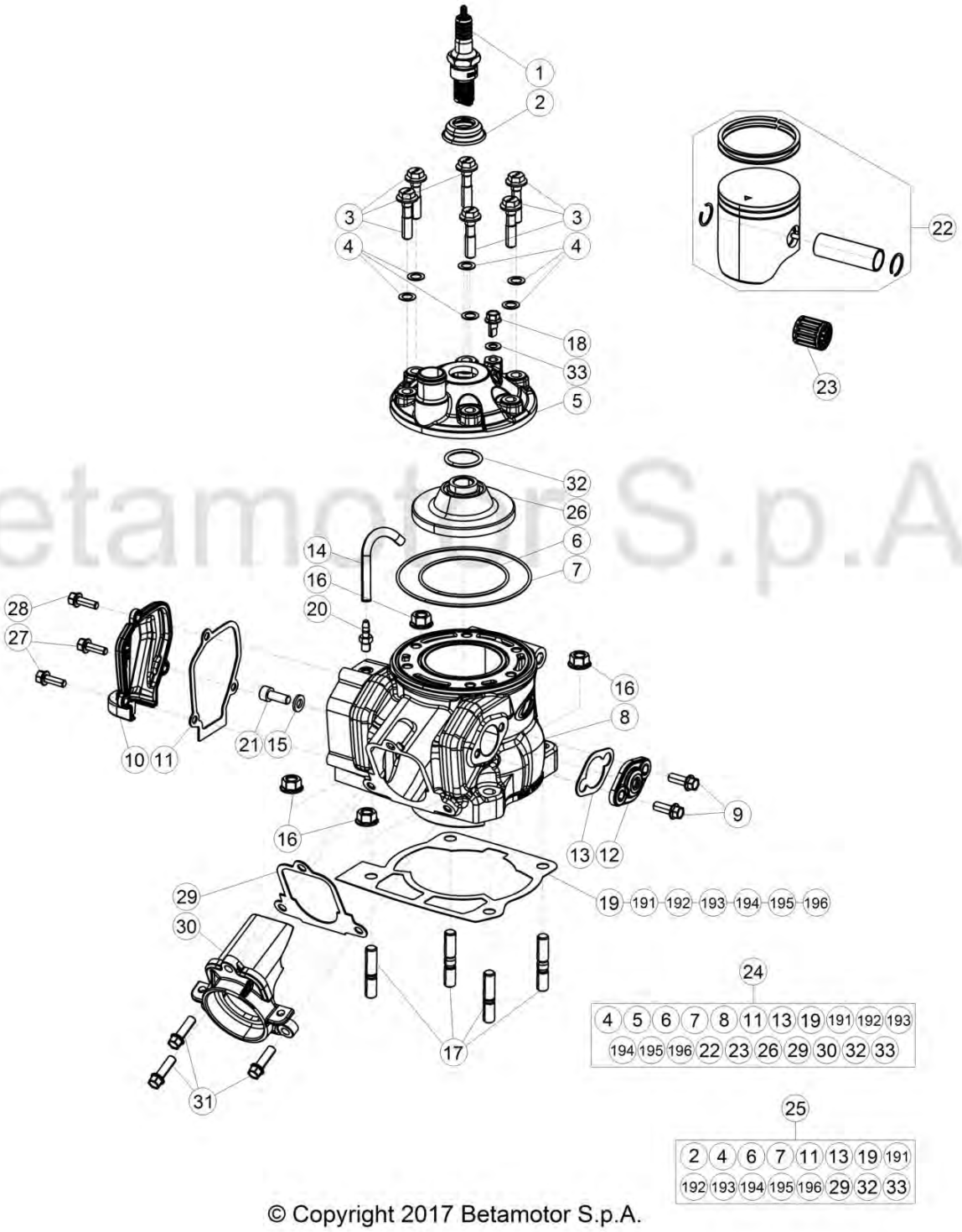

Betamotor S.p.A.

© Copyright 2017 Betamotor S.p.A.

Tav.11

Pos Loc Pos Ps Pos	Numero Number Numé ro Nú mero Nummer	Q.tà Q.ty Q.té M.ge C.ad	Nota Note Note Nota Anm.	Descrizione	Description	Dé signation	Beschreibung	Descripciò n
1	12.25126.000	1		Candela	Spark.plug	Bougie	Zü ndkerze	Bujia
2	026.10.012.00.00	1		Guarnizione candela	Spark plug gasket	Joint bougie	Zü ndkerzendichtring	Junta bujia
3	11.52429.000	6		Bullone speciale 7x31	Special bolt 7x31	Boulon spé ciale 7x31	Spezialschraube 7x31	Tornillo especial 7x31
4	27.45100.000	6		Rondella in rame 7x12x0,5	Copper washer 7x12x0,5	Rondelle en cuivre 7x12x0,5	Kupfer U.Scheibe 7x12x0,5	Arandela de cobre 7x12x0,5
5	035.11.007.00.59	1		Coperchio testa	Cylinder head cover	Couvercle culasse	Zylinderkopfabdeckung	Tapa culata
6	C02.06.060.00.00	1		Anello di tenuta 60.2	Oil seal 60.2	Joint spie 60.2	Dichtring 60.2	Reté n de aceite 60.2
7	C02.06.061.00.00	1		Anello di tenuta 92.2	Oil seal 92.2	Joint spie 92.2	Dichtring 92.2	Reté n de aceite 92.2
8	035.11.000.00.0A	1		CIlindro - Sel. A	Cylinder - Sel. A	Cylindre - Sé l. A	Zylinder - Auswahl A	Cilindro - Sel. A
8	035.11.000.00.0B	1		CIlindro - Sel. B	Cylinder - Sel. B	Cylindre - Sé l. B	Zylinder - Auswahl B	Cilindro - Sel. B
8	035.11.027.00.0A	1	RACING	CIlindro - Sel. A	Cylinder - Sel. A	Cylindre - Sé l. A	Zylinder - Auswahl A	Cilindro - Sel. A
8	035.11.027.00.0B	1	RACING	CIlindro - Sel. B	Cylinder - Sel. B	Cylindre - Sé l. B	Zylinder - Auswahl B	Cilindro - Sel. B
9	11.48025.000	2		Bullone 6x16 ch 8 rs	Bolt 6x16 ch 8 rs	Boulon 6x16 ch 8 rs	Bolzen 6x16 ch 8 rs	Tornillo 6x16 ch 8 rs
10	035.11.003.40.59	1		Coperchio	Cover	Couvercle	Deckel	Tapa
10	035.11.032.40.59	1	RACING	Coperchio	Cover	Couvercle	Deckel	Tapa
11	035.11.004.00.00	1		Guarnizione	Packing	Joint	Dichtung	Junta
12	035.11.013.00.59	1		Coperchio	Cover	Couvercle	Deckel	Tapa
13	035.11.018.00.00	1		Guarnizione	Packing	Joint	Dichtung	Junta
14	026.11.012.00.00	1		Tubo benzina	Petrol tube	Tuyau d' essence	Benzinschlauch	Tubo gasolina
15	27.40500.000	1		Rondella 6x13	Washer 6x13	Rondelle 6x13	U.Scheibe 6x13	Arandela 6x13
16	035.11.019.00.00	4		Dado	Nut	Ecrou	Mutter	Tuerca
17	25.98050.000	4		Prigioniero 8.41	Stud 8.41	Goujon 8.41	Stiftschraube 8.41	Espá rrago 8.41
18	11.47018.000	1		Bullone speciale M6x12 RS CH8	Special bolt M6x12 RS CH8	Boulon spé ciale M6x12 RS CH8	Spezialschraube M6x12 RS CH8	Tornillo especial M6x12 RS CH8
19	035.11.010.00.00	1		Guarnizione cilindro SP. 0,3	Cylinder gasket SP. 0,3	Garniture cylindre SP. 0,3	Zylinderdichtung SP. 0,3	Junta cilindro SP. 0,3
191	035.11.011.00.00	1		Guarnizione cilindro SP. 0,4	Cylinder gasket SP. 0,4	Garniture cylindre SP. 0,4	Zylinderdichtung SP. 0,4	Junta cilindro SP. 0,4
192	035.11.012.00.00	1		Guarnizione cilindro SP. 0,5	Cylinder gasket SP. 0,5	Garniture cylindre SP. 0,5	Zylinderdichtung SP. 0,5	Junta cilindro SP. 0,5
193	035.11.022.00.00	1		Guarnizione cilindro SP. 0,125	Cylinder gasket SP. 0,125	Garniture cylindre SP. 0,125	Zylinderdichtung SP. 0,125	Junta cilindro SP. 0,125
194	035.11.023.00.00	1		Guarnizione cilindro SP. 0,2	Cylinder gasket SP. 0,2	Garniture cylindre SP. 0,2	Zylinderdichtung SP. 0,2	Junta cilindro SP. 0,2
195	035.11.024.00.00	1		Guarnizione cilindro SP. 0,25	Cylinder gasket SP. 0,25	Garniture cylindre SP. 0,25	Zylinderdichtung SP. 0,25	Junta cilindro SP. 0,25
196	035.11.025.00.00	1		Guarnizione cilindro SP. 0,6	Cylinder gasket SP. 0,6	Garniture cylindre SP. 0,6	Zylinderdichtung SP. 0,6	Junta cilindro SP. 0,6
20	29.00280.000	1		Tappo presa dep.	Air Vent Plug	Bouchon prise dep.	Verschluss f. Lufteinlass	Tapó n Toma Aire dep.
21	31.31050.000	1		Vite t.c.c.e.M6x15	Screw t.c.c.e.M6x15	Vis t.c.c.e.M6x15	Schraube t.c.c.e.M6x15	Tornillo t.c.c.e.M6x15
22	035.02.019.80.0A	1		Pistone completo - Sel. A 125cc	Piston set - Sel. A 125cc	Piston compl. - Sé l. A 125cc	Kolben, kompl. - Auswahl A 125cc	Pistó n, compl. - Sel. A 125cc
22	035.02.019.80.0B	1		Pistone completo - Sel. B 125cc	Piston set - Sel. B 125cc	Piston compl. - Sé l. B 125cc	Kolben, kompl. - Auswahl B 125cc	Pistó n, compl. - Sel. B 125cc
22	035.02.019.80.0C	1		Pistone completo - Sel. C 125cc	Piston set - Sel. C 125cc	Piston compl. - Sé l. C 125cc	Kolben, kompl. - Auswahl C 125cc	Pistó n, compl. - Sel. C 125cc
23	007.02.053.00.00	1		Gabbia	Cage	Cage	Lagerkä fig	Jaula
24	035.11.002.82.0A	1		Cilindro - Kit Sel. A	Cylinder - Kit Sel. A	Cylindre - Kit Sé l. A	Zylinder - Kit Auswahl A	Cilindro - Kit Sel. A
24	035.11.002.82.0B	1		Cilindro - Kit Sel. B	Cylinder - Kit Sel. B	Cylindre - Kit Sé l. B	Zylinder - Kit Auswahl B	Cilindro - Kit Sel. B
24	035.11.035.82.0A	1	RACING	Cilindro - Kit Sel. A	Cylinder - Kit Sel. A	Cylindre - Kit Sé l. A	Zylinder - Kit Auswahl A	Cilindro - Kit Sel. A
24	035.11.035.82.0B	1	RACING	Cilindro - Kit Sel. B	Cylinder - Kit Sel. B	Cylindre - Kit Sé l. B	Zylinder - Kit Auswahl B	Cilindro - Kit Sel. B
25	035.11.005.82.00	1		Guarnizioni - Kit	Packings - Kit	Joints - Kit	Dichtungenssatz	Juntas - Kit
25	035.11.037.82.00	1	RACING	Guarnizioni - Kit	Packings - Kit	Joints - Kit	Dichtungenssatz	Juntas - Kit
26	035.11.015.00.00	1		Camera di combustione	Compression chamber	Chambre de combustion	Verbrennungsraum	Cá mara de combustió n
27	11.46360.000	2		Bullone flangiato M5x16 RS CH8	Head Flanged bolt M5x16 RS CH8	Boulon Bridé M5x16 RS CH8	Bundbolzen M5x16 RS CH8	Bulón con Brida M5x16 RS CH8
28	026.11.036.00.00	1		Vite di sicurezza	Safety screw	Vis de sû reté	Sicherheitschraube	Tornillo de seguridad
29	035.11.017.00.00	1		Guarnizione	Packing	Joint	Dichtung	Junta
29	035.11.034.00.00	1	RACING	Guarnizione	Packing	Joint	Dichtung	Junta
30	035.11.001.00.00	1		Flangia scarico	Flange exhaust	Bride é chappement	Auslassflensch	Brida de escape
30	035.11.030.00.00	1	RACING	Flangia scarico	Flange exhaust	Bride é chappement	Auslassflensch	Brida de escape
31	11.49070.000	3		Bullone 6x20 ch rs	Bolt 6x20 ch rs	Boulon 6x20 ch rs	Bolzen 6x20 ch rs	Tornillo 6x20 ch rs
32	10.66505.000	1		Anello OR 22.27.2,5 vyton	O-Ring 22.27.2,5 vyton	Bague d' é tanché ité 22.27.2,5 vyton	O-Ring 22.27.2,5 vyton	Anillo OR 22.27.2,5 vyton
33	27.40495.000	1		Rondella in rame 6.11	Copper washer 6.11	Rondelle en cuivre 6.11	Kupfer U.Scheibe 6.11	Arandela de cobre 6.11

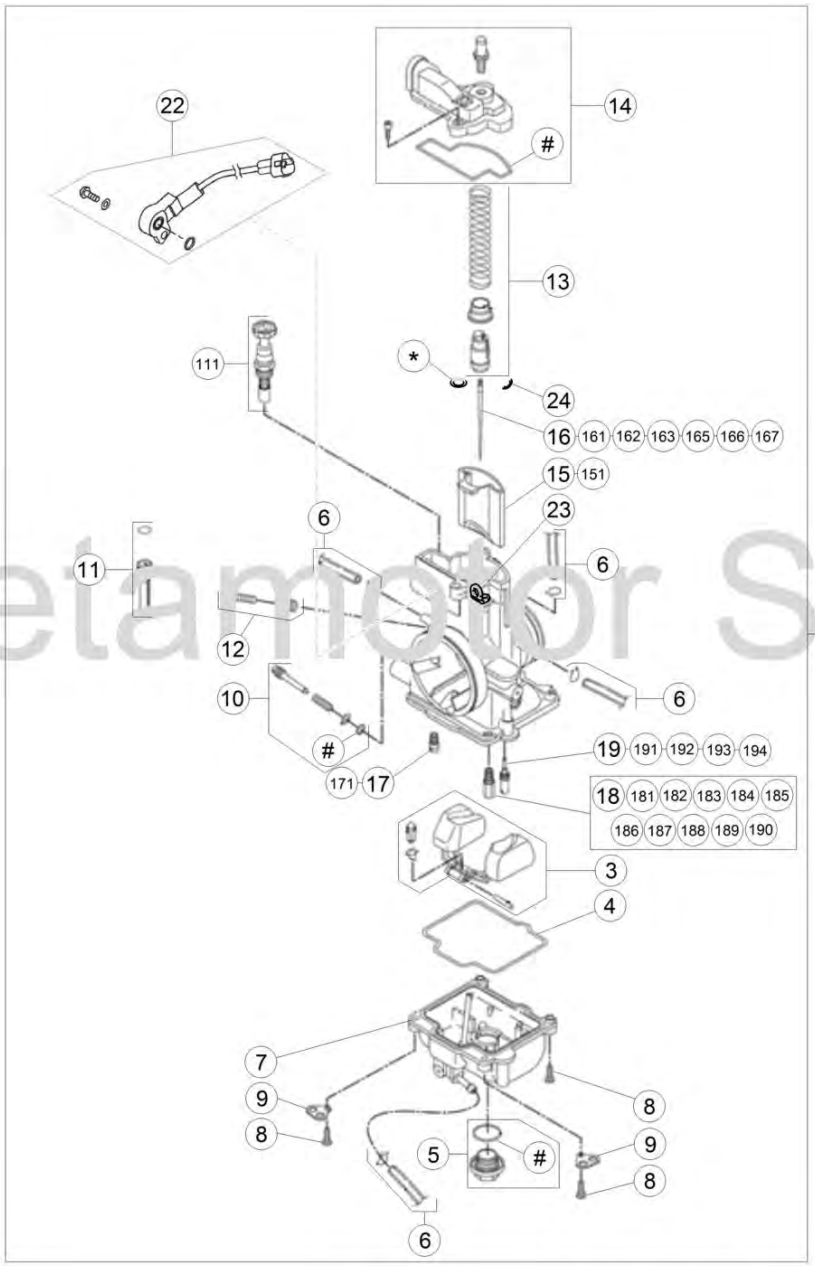

Betamotor S.p.A.

© Copyright 2018 Betamotor S.p.A.

Tav.12

Pos Loc Pos Ps Pos	Numero Number Numé ro Nú mero Nummer	Q.tà Q.ty Q.té M.ge C.ad	Nota Note Note Nota Anm.	Descrizione	Description	Dé signation	Beschreibung	Descripciò n
1	035.12.002.82.00	1		Carburatore	Carburettor	Carburateur	Vergaser	Carburador
2	035.12.000.00.00	1	STD-EU + RACING	Carburatore	Carburettor	Carburateur	Vergaser	Carburador
3	026.12.009.80.00	1		Galleggiante	Float	Flotteur	Schwimmer	Flotador
4	026.12.011.00.00	1		Guarnizione vaschetta	Float chamber gasket	Joint vase essence	Dichtung Schwimmergehä use	Junta cuba
5	026.12.106.80.00	1		Tappo vaschetta carburatore	Cap drain	Bouchon	Verschluss	Tapó n
6	026.12.045.00.00	1		Kit tubi sfiato	Breather pipes kit	Kit tuyaux reniflard	Kit Entlü ftungsleitungen	Kit tubos respiraderos
7	026.12.107.00.00	1		Vaschetta completa	Chamber assy.	Cuvette compl.	Becken kpl	Cubeta compl.
8	026.12.016.00.00	3		Vite M4x16	Screw M4x16	Vis M4x16	Schraube M4x16	Tornillo M4x16
9	026.12.024.00.00	2		Piastrina	Plate	Plaquette	Plä ttchen	Placa
10	026.12.028.80.00	1		Vite di regolazione	Adjusting screw	Vis de ré glage	Schraube, Einstell	Tornillo de regul.
11	026.12.006.80.00	1		Distanziale	Spacer	Entretoise	Distanzstü ck	Distanciador
111	026.12.008.00.00	1		Pistone starter	Starter piston	Piston starter	Kolben starter	Pistó n starter
12	026.12.032.80.00	1		Vite di regolazione	Adjusting screw	Vis de ré glage	Schraube, Einstell	Tornillo de regul.
13	026.12.037.80.00	1		Molla valvola	Valve spring	Ressort soupape	Ventilfeder	Muelle vá lvula
14	026.12.060.00.00	1		Coperchio carburatore	Carburettor cover	Couvercle carburateur	Abdeckung Vergaser	Tapa carburador
15	026.12.105.00.00	1		Valvola Carburatore	Carb Valve	Soupape Carburateur	Vergaserventil	Vá lvula Carb.
151	036.12.002.00.00	1		Valvola Carburatore 7.5	Carb Valve 7.5	Soupape Carburateur 7.5	Vergaserventil 7.5	Vá lvula Carb. 7.5
16	035.12.001.00.00	1	125cc + RACING	Spillo N0ZH	Needle N0ZH	Pointeau N0ZH	Dü sennadel N0ZH	Aguja N0ZH
161	035.12.003.00.00	1	RACING	Spillo N0ZG	Needle N0ZG	Pointeau N0ZG	Dü sennadel N0ZG	Aguja N0ZG
162	035.12.004.00.00	1		Spillo N0ZF	Needle N0ZF	Pointeau N0ZF	Dü sennadel N0ZF	Aguja N0ZF
163	035.12.005.00.00	1		Spillo N84I	Needle N841	Pointeau N841	Dü sennadel N841	Aguja N841
165	026.12.022.00.00	1		Spillo N0ZK	Needle N0ZK	Pointeau N0ZK	Dü sennadel N0ZK	Aguja N0ZK
166	026.12.023.00.00	1		Spillo N0ZJ	Needle N0ZJ	Pointeau N0ZJ	Dü sennadel N0ZJ	Aguja N0ZJ
167	026.12.050.00.00	1		Spillo N0ZI	Needle N0ZI	Pointeau N0ZI	Dü sennadel N0ZI	Aguja N0ZI
17	026.12.005.00.00	1		Getto starter 50	Starter jet 50	Gicleur starter 50	Starterdü se 50	Surtidor starter 50
171	026.12.046.00.00	1	125cc + RACING	Getto starter 85	Starter jet 85	Gicleur starter 85	Starterdü se 85	Surtidor starter 85
18	035.12.006.00.00	1		Getto massimo 92	Main jet 92	Gicleur maxi 92	Hâ uptdü se 92	Surtidor má ximo 92
181	36.25113.000	1		Getto massimo 178	Main jet 178	Gicleur maxi 178	Hâ uptdü se 178	Surtidor má ximo 178
182	36.25114.000	1		Getto massimo 180	Main jet 180	Gicleur maxi 180	Hâ uptdü se 180	Surtidor má ximo 180
183	36.25115.000	1		Getto massimo 182	Main jet 182	Gicleur maxi 182	Hâ uptdü se 182	Surtidor má ximo 182
184	36.25116.000	1		Getto massimo 185	Main jet 185	Gicleur maxi 185	Hâ uptdü se 185	Surtidor má ximo 185
185	36.25108.000	1		Getto massimo 165	Main jet 165	Gicleur maxi 165	Hâ uptdü se 165	Surtidor má ximo 165
186	36.25109.000	1		Getto massimo 168	Main jet 168	Gicleur maxi 168	Hâ uptdü se 168	Surtidor má ximo 168
187	36.25110.000	1	RACING	Getto massimo 170	Main jet 170	Gicleur maxi 170	Hâ uptdü se 170	Surtidor má ximo 170
188	36.25111.000	1	RACING	Getto massimo 172	Main jet 172	Gicleur maxi 172	Hâ uptdü se 172	Surtidor má ximo 172
189	36.25112.000	1	125cc + RACING	Getto massimo 175	Main jet 175	Gicleur maxi 175	Hâ uptdü se 175	Surtidor má ximo 175
190	36.25118.000	1		Getto massimo 190	Main jet 190	Gicleur maxi 190	Hâ uptdü se 190	Surtidor má ximo 190
19	16.42357.000	1		Getto minimo 35	Starter jet 35	Gicleur starter 35	Starterdü se 35	Surtidor starter 35
191	16.42348.000	1		Getto minimo 48	Starter jet 48	Gicleur starter 48	Starterdü se 48	Surtidor starter 48
192	16.42344.000	1	125cc + RACING	Getto minimo 50	Starter jet 50	Gicleur starter 50	Starterdü se 50	Surtidor starter 50
193	16.42358.000	1	RACING	Getto minimo 52	Starter jet 52	Gicleur starter 52	Starterdü se 52	Surtidor starter 52
194	16.42359.000	1		Getto minimo 55	Starter jet 55	Gicleur starter 55	Starterdü se 55	Surtidor starter 55
20	026.12.044.00.00	1		Kit guarnizioni	Packings kit	Jeu joints	Dichtungenssatz	Grupo juntas
22	036.12.004.00.00	1		Sensore posizione valvola a farfalla	Throttle Position Sensor	Sensor Position Valve	Sensor Gasschieberposition	Sensor Valvula
23	25.57912.000	1		Piastrina fissaggio molla collettore	Retaining plate, manifold spring	Plaque de fixation ressort de coll.	Befestigungsplatte krü mmerfeder	Pastilla de fijació n del muelle colector
24	12.54242.000	1		Clip carburatore	Carburetor clip	Carburateur clip	Clip Vergaser	Clip carburador

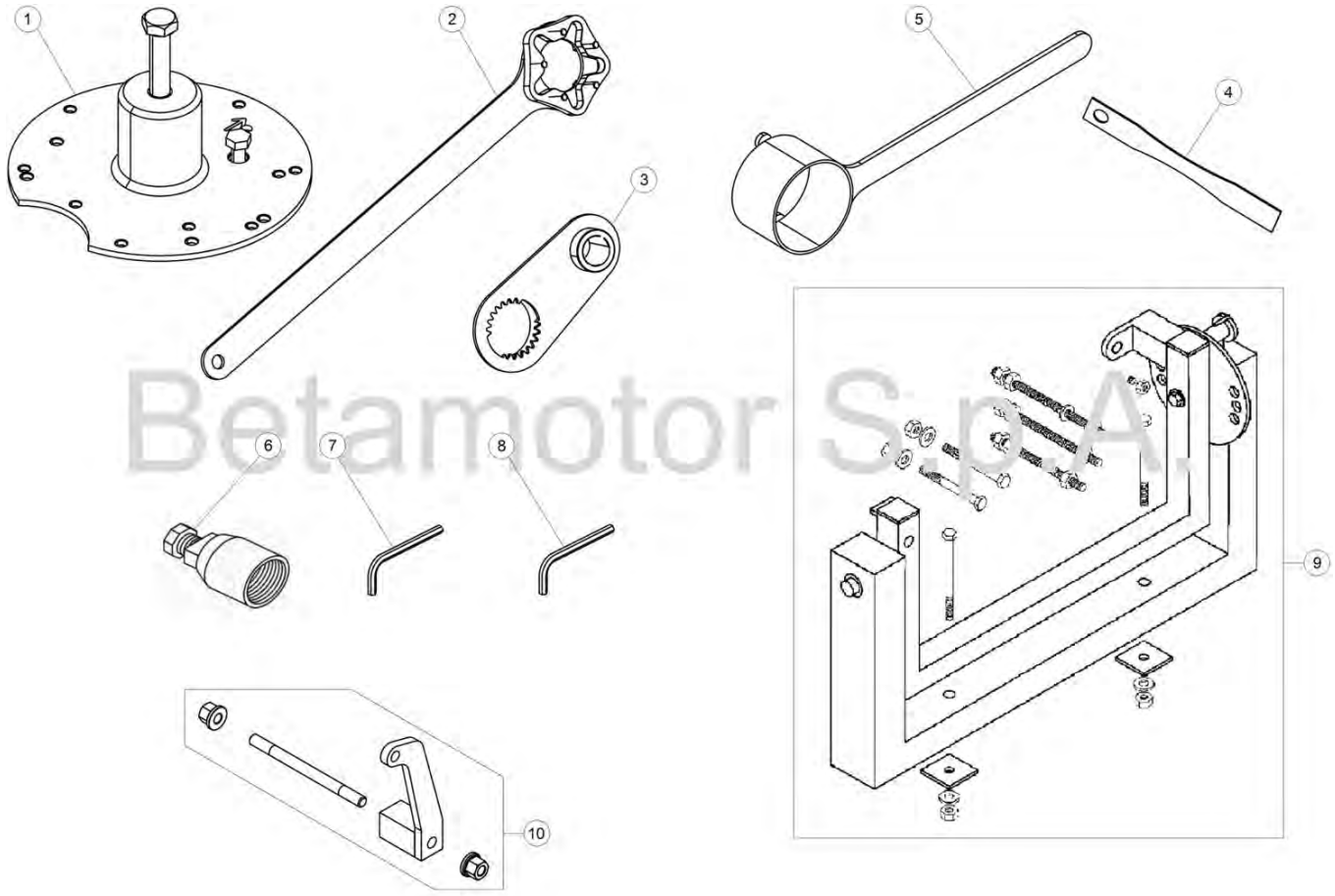

Betamotor S.p.A.

© Copyright 2018 Betamotor S.p.A.

Tav.14

Pos Loc Pos Ps Pos	Numero Number Numé ro Nú mero Nummer	Q.tà Q.ty Q.té M.ge C.ad	Nota Note Note Nota Anm.	Descrizione	Description	Dé signation	Beschreibung	Descripciò n
1	007.14.010.80.00	1		Utensile	Tool	Outil	Werkzeug	Herramienta
2	035.14.000.80.00	1		Utensile	Tool	Outil	Werkzeug	Herramienta
3	035.14.006.50.00	1		Utensile	Tool	Outil	Werkzeug	Herramienta
4	007.44.010.00.00	1		Strumento misura squish	Squish measuring tool	Outil de mesure du squish	Werkzeug fü r Quetschkante ausmessen	Herramienta para medir el squish
5	026.14.005.50.00	1		Attrezzo bloccaggio volano	Holding Tool, Flywheel	Clé de fixation volant	Halteschlü ssel fü r Schwungrad	Llave para sostener el volante
6	36.25173.000	1		Estrattore volano	Flywheel extractor	Extracteur pour volant	Auszieher fü r Schwungrad	Extractor volante
7	026.44.029.00.00	1		Chiave speciale	Special wrench	Clé speciale	Spezialschlü ssel	Llave special
8	007.44.035.00.00	1		Chiave speciale	Special wrench	Clé speciale	Spezialschlü ssel	Llave special
9	36.25132.000	1		Attrezzatura universale mont. motore	Engine assembly universal tool	Outil universel montage moteur	Universalwerkzeug montage des motors	Herramienta universal montaje motor
10	035.14.008.80.00	1		Supporto motore	Engine support	Support moteur	Motorhalterung	Soporte motor

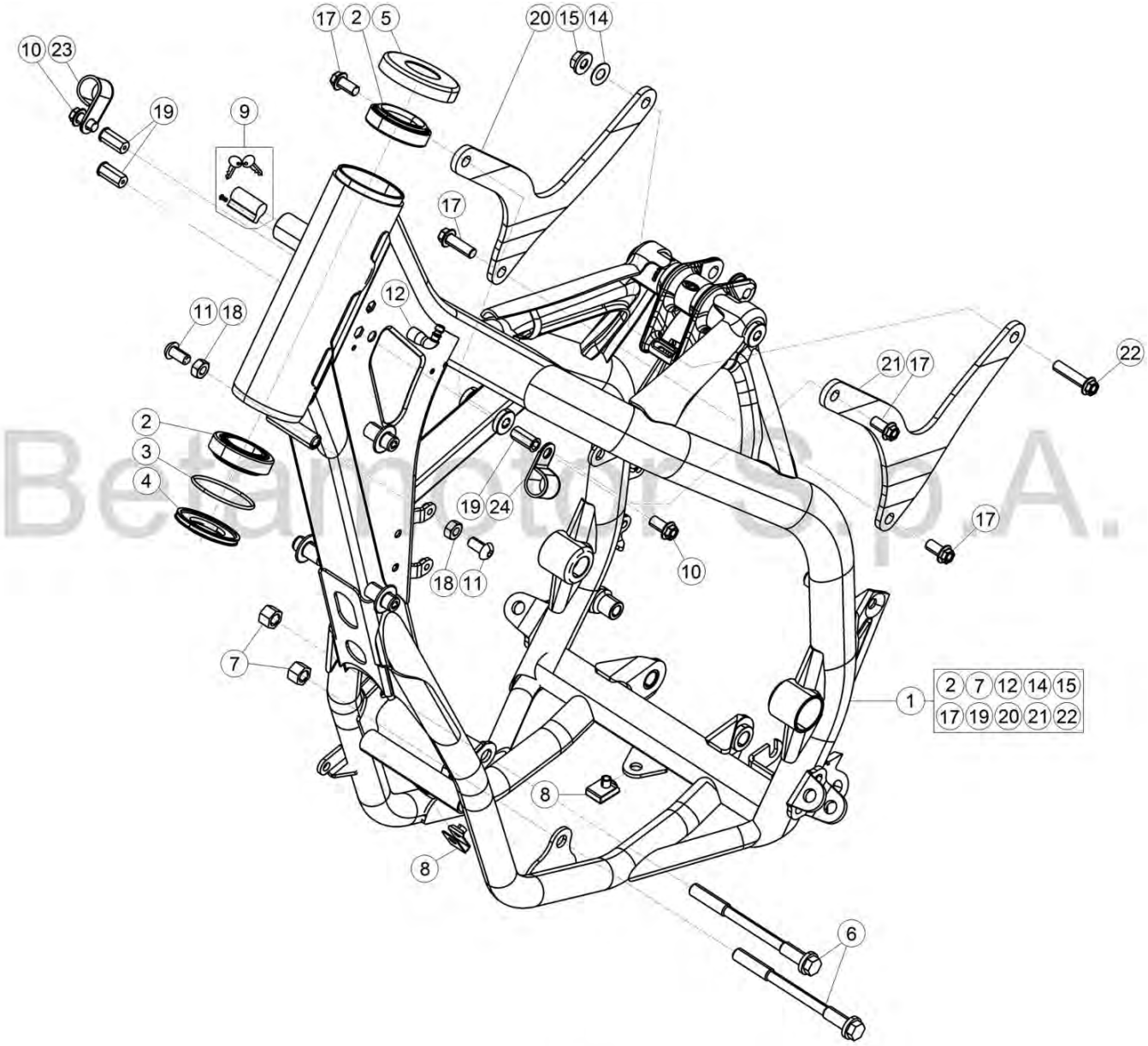

Betamotor S.p.A.

© Copyright 2018 Betamotor S.p.A.

Tav.31

Pos Loc Pos Ps Pos	Numero Number Numé ro Nú mero Nummer	Q.tà Q.ty Q.té M.ge C.ad	Nota Note Note Nota Anm.	Descrizione	Description	Dé signation	Beschreibung	Descripciò n
1	035.31.000.80.50	1		Telaio completo	Frame, assy	Chassis complet	Rahmen, kpl	Bastidor compl.
2	12.99510.000	2		Cuscinetto conico 29x50x15	Conical bearing 29x50x15	Roulement conique 29x50x15	Lager 29x50x15	Cojinete conico 29x50x15
3	10.66935.000	1		Anello OR	O-Ring	Bague d' é tanché ité	O-Ring	Anillo OR
4	020.31.039.00.00	1		Anello parapolvere	Dust cover	Disque pare-poussié re	Staubdeckel	Disco gurdapolvo
5	031.31.016.22.00	1		Protezione cuscinetto sterzo	End Cap Bearing	Palier De Bielle	Lagerdeckel	Tapa Rodamiento
6	11.64607.000	2		Perno motore	Engine pin	Axe moteur	Motorbolzen	Perno motor
7	13.21060.000	2		Dado M10X1,25	Nut M10x1,25	Ecrou M10x1,25	Mutter M10x1,25	Tuerca M10x1,25
8	25.60311.000	2		Piastrina elastica M6	Spring plate M6	Plaquette é lastique M6	Plä ttchen M6	Pletina elá stica M6
9	28.85861.000	1		Serratura bloccasterzo	Security lock	Serrure blocage guidon	Lenkradschloss	Cerradura bloque manillar
10	11.48025.000	2		Bullone 6.16 rs ch8	Bolt 6.16 rs ch8	Boulon 6.16 rs ch8	Bolzen 6.16 rs ch8	Tornillo 6.16 rs ch8
11	31.64060.000	2		Vite TBCE M8X16	Screw TBCE M8X16	Vis TBCE M8X16	Schraube TBCE M8X16	Tornillo TBCE M8X16
12	27.23473.000	1		Raccordo sfiato olio	Oil breather joint	Raccord ré niflard huile	Entlü ftungstutzen	Racor respiradero aceite
14	27.49500.000	1		Rondella	Washer	Rondelle	U.Scheibe	Arandela
15	13.17123.000	1		Dado M8 flangiato	Nut M8	Ecrou M8	Mutter M8	Tuerca M8
17	11.54521.000	4		Bullone M8x16	Bolt M8x16	Boulon M8x16	Bolzen M8x16	Tornillo M8x16
18	13.16000.000	2		Dado M8x6	Nut M8x6	Ecrou M8x6	Mutter M8x6	Tuerca M8x6
19	27.33741.000	4		Rivetto	Rivet	Rivet	Niete	Remache
20	035.31.006.42.59	1		Staffa dx.	Bracket R.H.	Bride D.	Befestigung R.	Brida der.
21	035.31.008.42.59	1		Staffa sx.	Bracket L.H.	Bride G.	Befestigung L.	Brida izq.
22	11.55920.000	1		Bullone 8.60 CH10 RS	Bolt 8.60 CH10 RS	Boulon 8.60 CH10 RS	Bolzen 8.60 CH10 RS	Tornillo 8.60 CH10 RS
23	15.14654.000	1		Fascetta passacavo 14	Grommet 14	Passe-câ ble 14	Kabeldurchgang 14	Pasacables 14
24	C07.19.001.00.00	1		Fascetta nastro in gomma	Rubber grommet	Passe-câ ble en coutchouc	Kabeldurchgang	Pasacables en goma

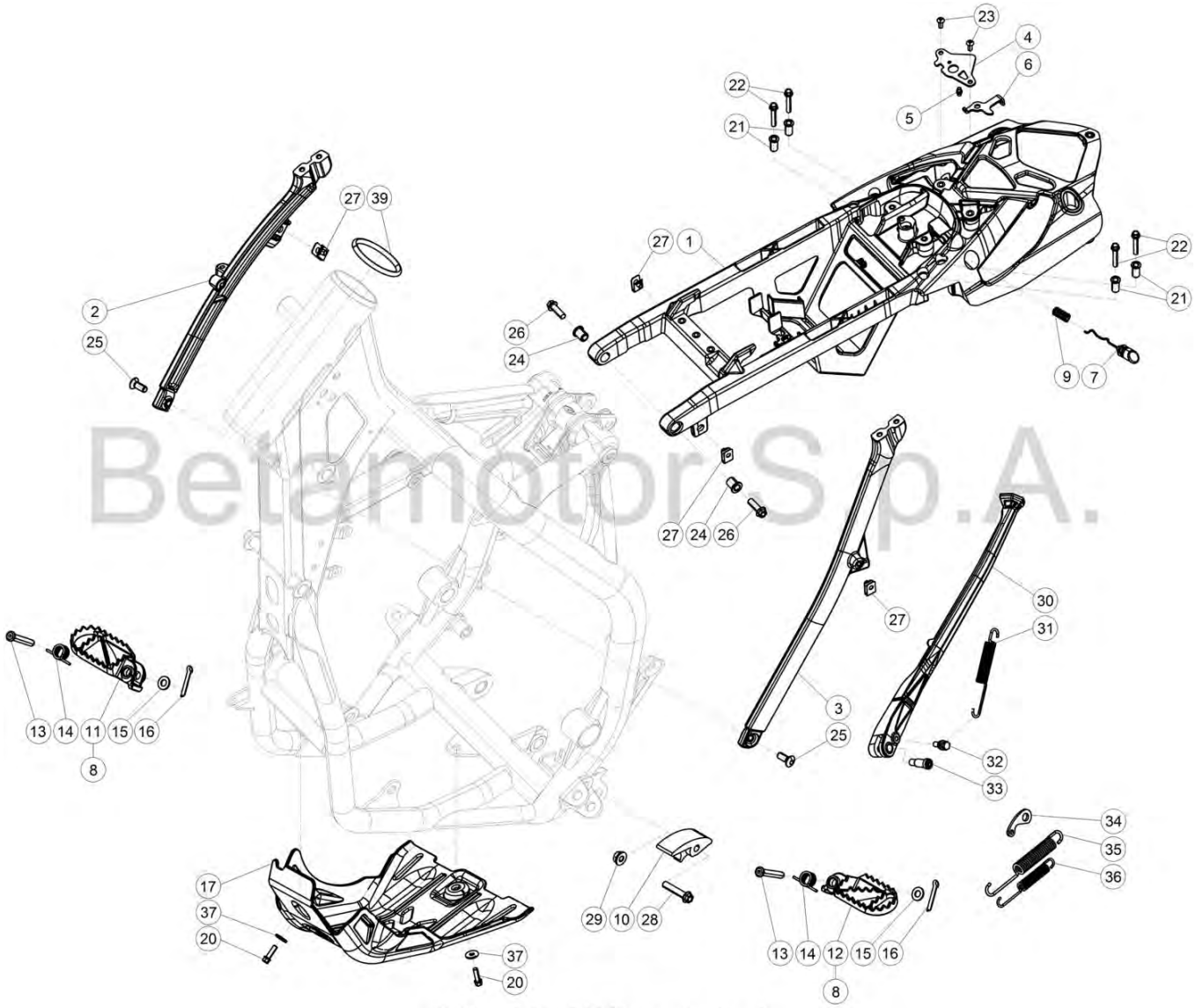

© Copyright 2018 Betamotor S.p.A.

Tav.32

Pos Loc Pos Ps Pos	Numero Number Numé ro Nú mero Nummer	Q.tà Q.ty Q.té M.ge C.ad	Nota Note Note Nota Anm.	Descrizione	Description	Dé signation	Beschreibung	Descripciò n
1	026.32.003.80.51	1		Telaietto posteriore	Rear frame	Châ ssis arriè re	Hinterer kleiner Rahmen	Bastidor trasero
2	020.32.100.00.59	1		Braccetto destro	Right arm	Bras droit	Rechter Schutzblecharm	Brazo derecho
3	020.32.027.42.59	1		Attacco telaio posteriore sx	Rear LH frame fastening	Fixation châ ssis arriè re gauche	Rahmen befestigung hinten links	Enganche bastidor trasero izq.
4	020.32.010.00.05	1		Piastra fissaggio serratura	Lock sec. Plate	Plaque fix. Serrure	Befestigungsplatte Schloß	Chapa fij. cerradura
5	020.32.112.00.00	1		Perno serratura	Pin	Pivot	Zapfen	Perno
6	020.32.011.00.05	1		Piasta ritegno serratura	Plate	Plaquette	Schild	Placa
7	020.32.013.80.51	1		Bottone	Knob	Bouton	Knopf	Boton
8	026.32.004.80.00	1	RACING	Pedane - coppia	Foot peg couple	Couple repose-pieds	Pedalpaar	Par de estribos
9	020.32.016.00.00	1		Molla	Spring	Ressort	Feder	Muelle
10	25.25601.000	1		Pattino catena	Chain shoe	Doigt chaine	Gleitauflage	Patí n cadena
11	25.32521.000	1		Pedana dx.	Foot-peg R.H.	Repose-pieds d.	Fußblech rechts	Estribo der.
12	25.32531.000	1		Pedana sx.	Foot-peg L.H.	Repose-pieds g.	Fußblech links	Estribo izq.
13	25.54465.000	2		Perno pedana	Footrest pin	Pivot repose-pied	Rasten Pin	Eje estribera
14	016.32.020.00.00	2		Molla pedanina	Foot rest spring	Ressort repose-pied	Fußblechfeder	Muelle estribo
15	031.32.001.00.00	2		Rondella 10x21x2	Washer 10x21x2	Rondelle 10x21x2	U.Scheibe 10x21x2	Arandela 10x21x2
16	12.81993.000	2		Copiglia 3x20	Split pin 3x20	Goupille 3x20	Splint 3x20	Grupilla 3x20
17	035.32.001.00.59	1		Protezione motore	Engine protection	Protection moteur	Motorschutz	Protecció n motor
20	11.49070.000	2		Bullone 6x20 ch rs	Bolt 6x20 ch rs	Boulon 6x20 ch rs	Bolzen 6x20 ch rs	Tornillo 6x20 ch rs
21	020.32.004.00.00	4		Boccola superiore	Upper bush	Douille supé rieure	Obere Buchse	Casquillo superior
22	11.50355.000	4		Bullone M6x35	Bolt M6x35	Boulon M6x35	Bolzen M6x35	Tornillo M6x35
23	31.29810.000	2		Vite 5x12	Screw 5x12	Vis 5x12	Schraube 5x12	Tornillo 5x12
24	020.32.003.00.00	2		Boccola anteriore	Front bush	Douille avant	Vordere Buchse	Casquillo delantero
25	007.32.032.00.00	2		Vite speciale TSBEI CH6 M8x20 10.9 zinc	Special screw TSBEI CH6 M8x20 10.9 zinc	Vis spé ciale TSBEI CH6 M8x20 10.9 zinc	Spezialschraube TSBEI CH6 M8x20 10.9 zinc	Tornillo especial TSBEI CH6 M8x20 10.9 zinc
26	31.64070.000	2		Vite flangiata 8x30	Flanged screw 8x30	Vis à brides 8x30	Flanschschraube 8x30	Tornillo rebordeado 8x30
27	25.60311.000	4		Piastrina elastica M6	Spring plate M6	Plaquette é lastique M6	Plä ttchen M6	Pletina elá stica M6
28	11.55480.000	1		Vite M8x40	Screw M8x40	Vis M8x40	Schraube M8x40	Tornillo M8x40
29	13.17120.000	1		Dado flang. M8. CH13	Self locking nut M8. CH13	Ecrou de sé curité M8. CH13	Mutter, selbstsichernd M8. CH13	Tuerca de seguridad M8. CH13
30	031.32.070.00.00	1		Cavalletto	Central stand	Bé quille	Kippstä nder	Caballete
31	020.32.026.00.00	1		Molla cavalletto	Central stand spring	Ressort bé quille	Feder Kippstä nder	Muelle caballete
32	11.66615.000	1		Bullone spec. piastra cavalletto	Central stand special bolt	Boulon spec. plaque bé q.	Spezialschraube Kippstä nderplatte	Tornillo especial chapa caballete
33	11.66614.000	1		Bullone spec. cavalletto	Special bolt	Boulon spec.	Spezialschraube	Tornillo especial
34	25.57636.000	1		Piastrina aggancio molla	Bracket spring	Plaquette accroch. ressort	Plä ttchen federanlenkung	Placa eng. muelle
35	22.48819.000	1		Molla esterna	Spring	Ressort	Feder	Muelle
36	22.48818.000	1		Molla interna	Spring	Ressort	Feder	Muelle
37	27.42000.000	2		Rondella 6.18	Washer 6.18	Rondelle 6.18	U.Scheibe 6.18	Arandela 6.18
39	031.32.007.00.00	1		Anello di tenuta	Oil seal	Joint d' é tanché ité	Ölschutzring	Reté n de aceite

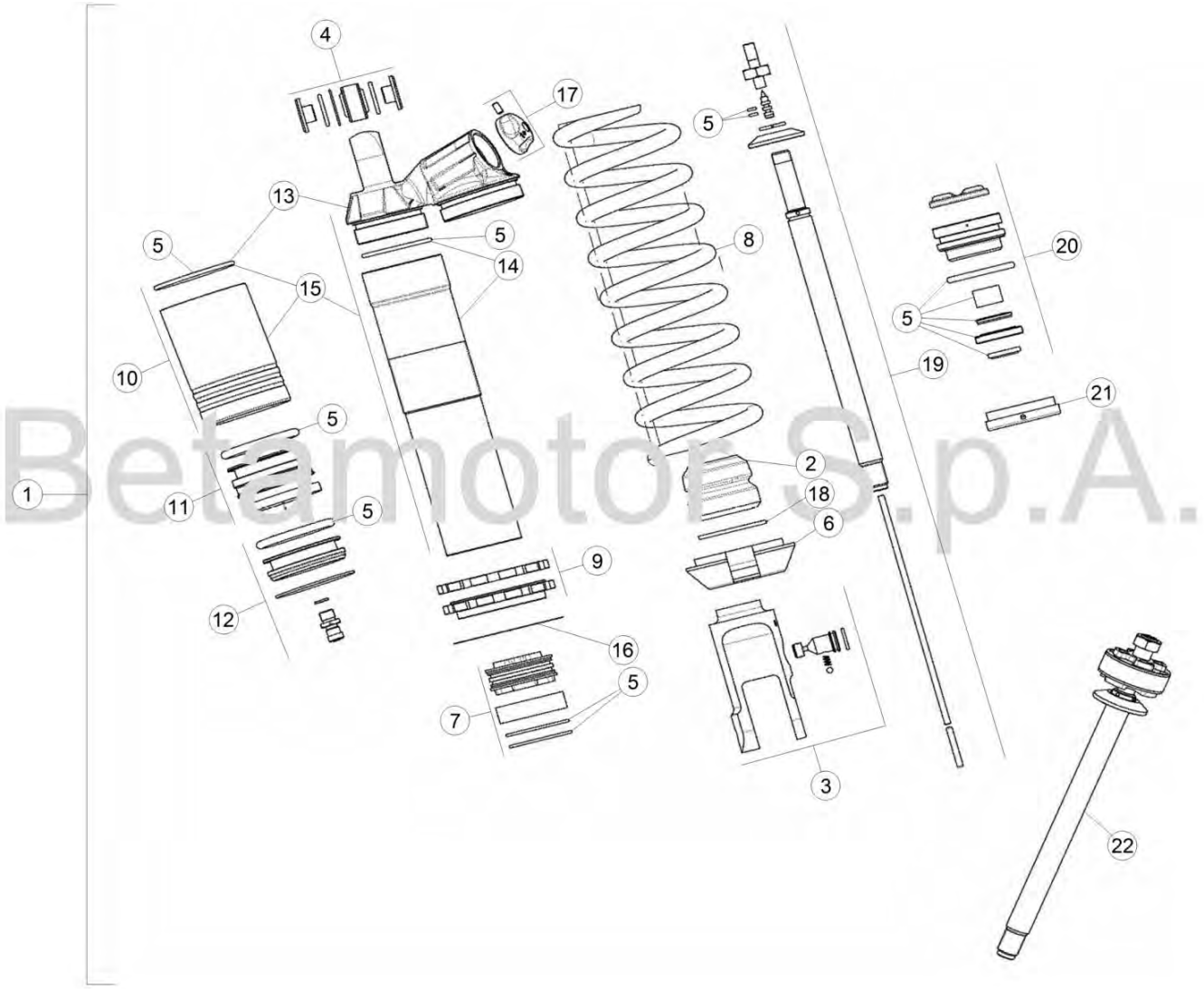

Betamotor S.p.A.

© Copyright 2018 Betamotor S.p.A.

Tav.33A

Pos Loc Pos Ps Pos	Numero Number Numé ro Nú mero Nummer	Q.tà Q.ty Q.té M.ge C.ad	Nota Note Note Nota Anm.	Descrizione	Description	Dé signation	Beschreibung	Descripciò n
1	035.33.002.80.00	1		Ammortizzatore completo	Shock absorber assembly	Amortisseur complet	Stoßdä mpfer komplett	Amortiguador completo
2	020.33.141.00.00	1		Tampone	Buffer	Silentbloc	Puffer	Silent-block
3	026.33.023.00.00	1		Forchetta ammortizzatore	Shock absorber inf. Connection	Fxation infè rieur ammortissateur	Untere befestigung stossdampfer	Fijador inferior amortiguador
4	13.86078.800	1		Kit distanziali ammortizzatore	Damper spacer kit	Jeu entretoises amortisseur	Kit Stoßdä mpfer Distanz	Juego distanciador amortiguador
5	026.33.015.82.00	1		Guarnizione - kit	Packing - kit	Joint - Jeu	Dichtungsatz	Jjunta - kit
6	15.39110.000	1		Fondello	Cup	Godet	Deckel	Cazoleta
7	026.33.020.00.00	1		Pistone	Piston	Piston	Kolben	Pistó n
8	035.33.004.00.00	1		Molla	Spring	Ressort	Feder	Muelle
9	026.33.019.00.00	1		Ghiera ammortizzatore	Damper adjusting ring nut	Collier de ré glage amortisseur	Einstellzwinge Stoßdä mpfer	Virola aiuste amortiguador
10	026.33.012.00.00	1		Serbatoio ammortizzatore	Shock absorber tank	Ré servoir de l'amortisseur	Gasbehä lter fü r Stoßdä mpfer	Depó sito amortiguador
11	026.33.013.00.00	1		Membrana	Diaphragm	Membrane	Membrane	Membrana
12	026.33.014.00.00	1		Tappo	Plug	Bouchon	Verschluß	Tapó n
13	026.33.016.00.00	1		Tappo	Plug	Bouchon	Verschluß	Tapó n
14	026.33.017.00.00	1		Corpo ammortizzatore	Damper body	Corps de l'amortisseur	Dä mpfungskö rpers	Cuerpo amortiguador
15	026.33.018.00.00	1		Corpo ammortizzatore	Damper body	Corps de l'amortisseur	Dä mpfungskö rpers	Cuerpo amortiguador
16	031.33.012.00.00	1		Rosetta	Washer	Rondelle	Federring	Arandela
17	026.33.021.00.00	1		Registro	Brake ad. sc.	Vis ré gl. fr.	Einstellschraube	Tornilllo de reg.
18	031.33.014.00.00	1		Rondella	Washer	Rondelle	U.Scheibe	Arandela
19	026.33.024.00.00	1		Stelo	Stem	Tige	Stange	Varilla
20	026.33.025.00.00	1		Guida	Rail	Guide	Fü hrung	Guí a
21	026.33.026.00.00	1		Tappo	Plug	Bouchon	Verschluß	Tapó n
22	035.33.005.80.00	1		Stelo completo	Operating rod, assy.	Tige compl.	Kolbenstange, kompl.	Varilla completa

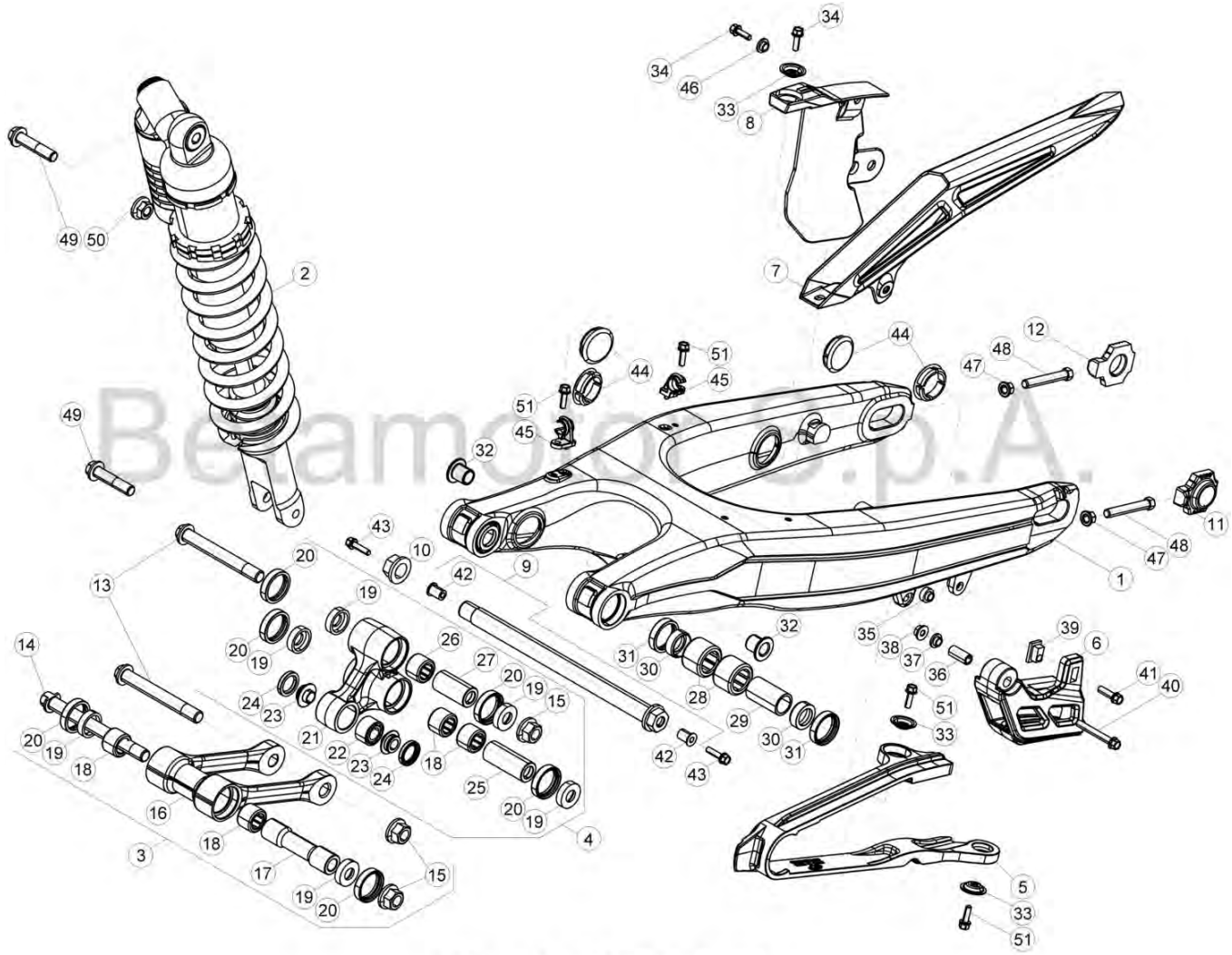

© Copyright 2017 Betamotor S.p.A.

Tav.33B

Pos Loc Pos Ps Pos	Numero Number Numéro Número Nummer	Q.tà Q.ty Q.té M.ge C.ad	Nota Note Note Nota Anm.	Descrizione	Description	Désignation	Beschreibung	Descripciòn
1	031.33.019.00.59	1		Forcellone	Big fork	Fourche	Radschwinge	Horquilla
2	035.33.002.80.00	1		Ammortizzatore	Shock absorber	Amortisseur	Stoßdämpfer	Amortiguador
3	020.33.030.80.00	1		Bielletta	Connecting rod	Biellette	Bolzensange	Bieleta
4	020.33.020.80.00	1		Bilanciere	Lever	Balancier	Kipphebel	Balancin
5	020.33.015.00.00	1		Tassello guidacatena super.	Upper sliding block	Cheville guide de chaine sup.	Schwingenschleifklotz oben	Protector cadena superior
6	29.10071.000	1		Tassello guidacatena infer.	Lower sliding block	Cheville guide de chaine inf.	Schwingenschleifklotz unten	Protector cadena inferior
7	12.88591.159	1		Copricatena superiore	Up. Chain cover	Couvre-chaine superieur	Kettenschutz oben	Cubrecadena superior
8	12.88594.159	1		Copricatena inferiore	Lower chain cover	Couvre-chaine inferieur	Kettenschutz unten	Cubrecadena inferior
9	031.33.142.80.00	1		Perno forcellone	Swingarm pivot	Axe fourche AR.	Schwingenbolzen	Eje basculante
10	13.27121.000	1		Dado speciale	Special nut	Ecrou spéciale	Spezialmutter	Tuerca especial
11	29.11866.100	1		Tendicatena SX	Chain adijuster L.	Tendeur de chaine G.	Ketterspanne L.	Tensor de cadena I.
11	031.33.003.42.50	1	RACING	Tendicatena SX	Chain adijuster L.	Tendeur de chaine G.	Ketterspanne L.	Tensor de cadena I.
12	29.11865.100	1		Tendicatena DX	Chain adjuster R.	Tendeur de chaine D.	Kettenspanner R.	Tensor de cadena D.
12	031.33.002.42.50	1	RACING	Tendicatena DX	Chain adjuster R.	Tendeur de chaine D.	Kettenspanner R.	Tensor de cadena D.
13	11.63992.000	2		Vite speciale M12	Special screw M12	Vis spéciale M12	Spezialschraube M12	Tornillo especial M12
14	020.33.032.00.00	1		Vite speciale M12	Special screw M12	Vis spéciale M12	Spezialschraube M12	Tornillo especial M12
15	13.21130.000	3		Dado autobloccante M12	Self locking nut M12	Ecrou de sécurité M12	Mutter, selbstsichernd M12	Tuerca de seguridad M12
16	020.33.030.00.00	1		Bielletta	Connecting rod	Biellette	Bolzensange	Bieleta
17	020.33.031.00.00	1		Distanziale	Spacer	Entretoise	Distanzstück	Distanciador
18	11.22055.000	4		Boccola a rulli 20x26x16	Roller bearing 20x26x16	Douille à roulements 20x26x16	Rollenbuchse 20x26x16	Caja de grasa de rodillos 20x26x16
19	28.14083.000	6		Scodellino	Stop washer	Rondelle d' ar	Federaufnahme	Platillo
20	10.64481.000	6		Paraolio	Oil seal	Pare-huile	Dichtring	Sello de lub.
21	020.33.020.00.00	1		Bilanciere	Lever	Balancier	Kipphebel	Balancin
22	16.17310.000	1		Boccola a rulli 12x24x30	Roller bearing 12x24x30	Douille à roulements 12x24x30	Rollenbuchse 12x24x30	Caja de grasa de rodillos 12x24x30
23	11.21920.000	2		Boccola	Bush	Moyeu	Büchse	Buje
24	10.56020.000	2		Paraolio 16x24x4	Oil seal 16x24x4	Pare-huile 16x24x4	Dichtring 16x24x4	Sello de lub. 16x24x4
25	13.62813.000	1		Distanziale 12x20x50	Spacer 12x20x50	Entretoise 12x20x50	Distanzstück 12x20x50	Distanciador 12x20x50
26	11.22061.000	1		Boccola a rulli 20x26x30	Roller bearing 20x26x30	Douille à roulements 20x26x30	Rollenbuchse 20x26x30	Caja de grasa de rodillos 20x26x30
27	13.62812.000	1		Distanziale 12x20x40	Spacer 12x20x40	Entretoise 12x20x40	Distanzstück 12x20x40	Distanciador 12x20x40
28	11.22056.000	4		Boccola a rullini 22x28x12	Roller cage 22x28x12	Cage Aiguille 22x28x12	Rollenkäfig 22x28x12	Jaula rodillos 22x28x12
29	13.49183.000	2		Distanziale forcellone	Big fork spacer	Entretoise fourche	Distanzstück Radschwinge	Distanciador horquilla
30	28.14081.000	4		Scodellino	Stop washer	Rondelle d' ar	Federaufnahme	Platillo
31	10.64481.000	4		Paraolio	Oil seal	Pare-huile	Dichtring	Sello de lub.
32	020.33.001.00.00	2		Boccola	Bush	Moyeu	Büchse	Buje
33	27.74786.000	3		Rondella bombata	Kasher	Rondelle	Scheibe	Arandela
34	11.46360.000	2		Bullone flangiato M5x16	Head Flanged bolt M5x16	Boulon Bridé M5x16	Bundbolzen M5x16	Buló n con Brida M5x16
35	13.12610.000	1		Dado	Nut	Ecrou	Mutter	Tuerca
36	13.49191.000	1		Distanziale	Spacer	Entretoise	Distanzstück	Distanciador
37	13.54820.000	1		Distanziale 6,5x9,0x13,5	Spacer 6,5x9,0x13,5	Entretoise 6,5x9,0x13,5	Distanzstück 6,5x9,0x13,5	Distanciador 6,5x9,0x13,5
38	13.13020.000	1		Dado autobloccante M6	Self locking nut M6	Ecrou de sécurité M6	Mutter, selbstsichernd M6	Tuerca de seguridad M6
39	13.48868.000	1		Distanziale tassello guidacatena	Sliding block spacer	Entretoise cheville guide de chaine	Abstandstück Schwingenschleifklotz	Separador protector cadena/basculante
40	11.05535.000	1		Bullone 6.50 rs ch 8	Bolt 6.50 rs ch 8	Boulon 6.50 rs ch 8	Bolzen 6.50 rs ch 8	Tornillo 6.50 rs ch 8
41	11.49070.000	1		Bullone 6x20 ch rs	Bolt 6x20 ch rs	Boulon 6x20 ch rs	Bolzen 6x20 ch rs	Tornillo 6x20 ch rs
42	27.33740.000	2		Rivetto filettato M6	Threaded rivet M6	Rivet fileté M6	Niete mit gewinde M6	Remache roscado M6
43	11.46401.000	2		Bullone M5x20	Bolt M5x20	Boulon M5x20	Bolzen M5x20	Tornillo M5x20
44	29.10596.136	4		Tappo forcellone D30	Big fork plug D30	Bouchon fourche D30	Radschwinge verschluß D30	Tapón horquilla D30
45	15.14605.000	2		Passatubo	Grommet	Passe-tube	Rohrdurchgang	Pasa-tubo
46	13.54820.000	1		Distanziale 6,5x9,0x13,5	Spacer 6,5x9,0x13,5	Entretoise 6,5x9,0x13,5	Distanzstück 6,5x9,0x13,5	Distanciador 6,5x9,0x13,5
47	13.17122.000	2		Dado flangiato M8 CH13	Flanged nut M8 CH13	Ecrou bordé M8 CH13	Flanschmutter M8 CH13	Tuerca embridada M8 CH13
48	11.55909.000	2		Bullone M8x55	Bolt M8x55	Boulon M8x55	Bolzen M8x55	Tornillo M8x55
49	11.62050.000	2		Bullone fiss. ammortzzatore M10x45	Damper sec. bolt M10x45	Boulon fix. amortisseur M10x45	Befestigungsbolzen M10x45	Tornillo fij amortiguador M10x45
50	13.21050.000	1		Dado flangiato M10X1,25	Flanged nut M10X1,25	Ecrou bordé M10X1,25	Flanschmutter M10X1,25	Tuerca embridada M10X1,25
51	11.46251.000	4		Bullone flangiato M5x12	Head Flanged bolt M5x12	Boulon Bridé M5x12	Bundbolzen M5x12	Buló n con Brida M5x12

STANDARD

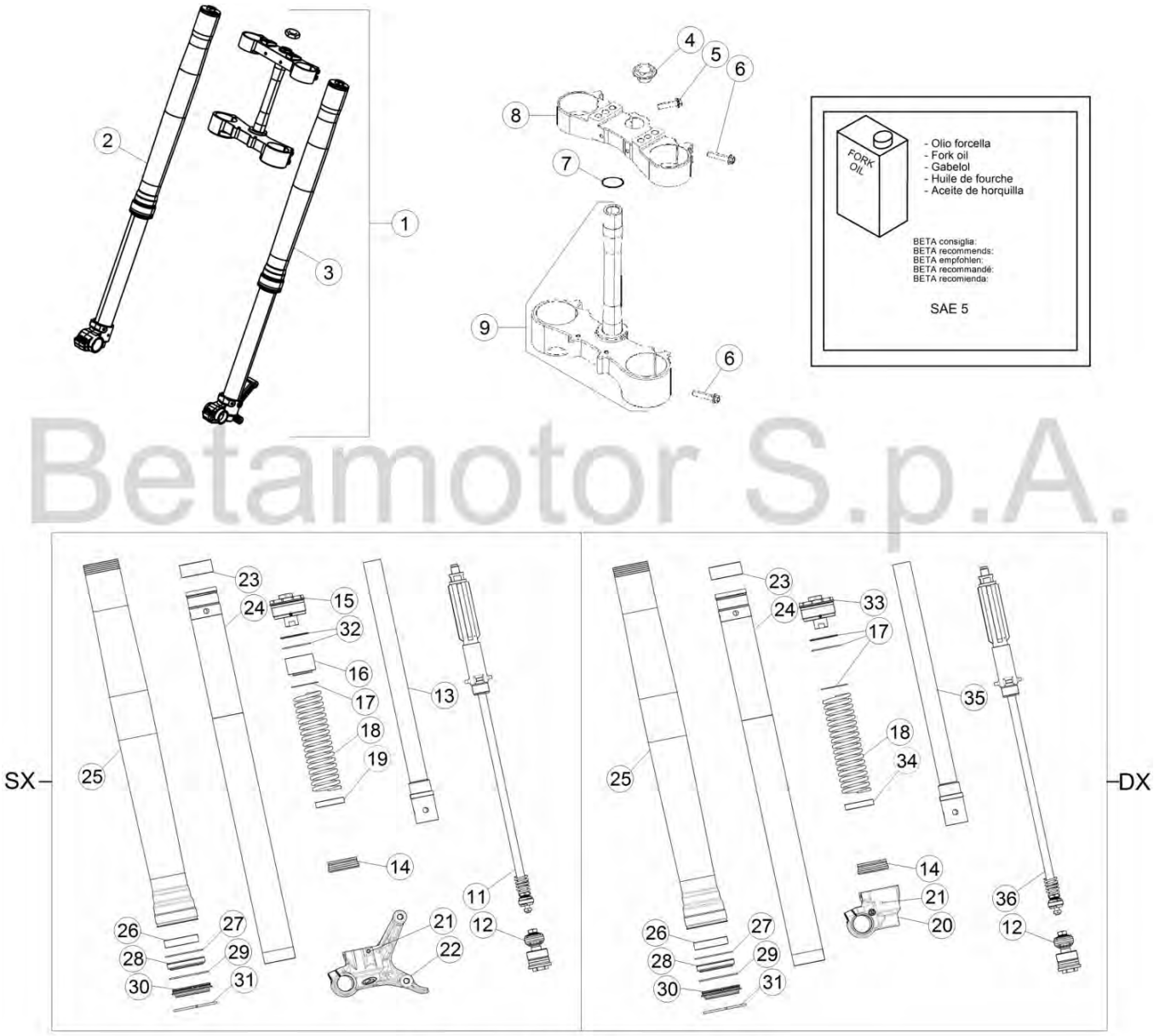

Betamotor S.p.A.

© Copyright 2018 Betamotor S.p.A.

Tav.34

Pos Loc Pos Ps Pos	Numero Number Numé ro Nú mero Nummer	Q.tà Q.ty Q.té M.ge C.ad	Nota Note Note Nota Anm.	Descrizione	Description	Dé signation	Beschreibung	Descripciò n
								STANDARD
1	035.34.006.82.00	1		Forcella	Fork	Fourche	Gabel	Horquilla
2	035.34.008.80.59	1		Gamba forcella Dx	RH leg	Tube D.	Rechte Beineinheit	Pata derecha
3	035.34.007.80.59	1		Gamba forcella Sx	LH leg	Tube G.	Linke Beineinheit	Pata izquierda
4	020.34.004.00.00	1		Dado 20X1,5	Nut 20X1,5	Ecrou 20X1,5	Mutter 20X1,5	Tuerca 20X1,5
5	11.55440.000	1		Bullone 8x30 ch10 rs	Bolt 8x30 ch10 rs	Boulon 8x30 ch10 rs	Bolzen 8x30 ch10 rs	Tornillo 8x30 ch10 rs
6	11.55510.000	8		Bullone M8x40	Bolt M8x40	Boulon M8x40	Bolzen M8x40	Tornillo M8x40
7	10.66420.000	1		Anello OR 20,22.3,53 NBR	O-Ring 20,22.3,53 NBR	Bague d' é tanché ité 20,22.3,53 NBR	O-Ring 20,22.3,53 NBR	Anillo OR 20,22.3,53 NBR
8	031.34.051.42.04	1		Piastra di sterzo superiore	Steering head	Tê te de direction	Gabelkopf	Tija superior
9	031.34.041.82.04	1		Piastra di sterzo inferiore compl.	Steering crown with pin	Socle de direction avec pivot	Untere Gabelbrü cke mit Bolzen	Base de direcció n con perno
11	035.34.016.00.00	1		Gruppo estensione	Rebound unit	Ecrou groupe dé tente	Zugstufengruppe	Grupo rebote
12	035.34.018.00.00	2		Gruppo compressione	Compression unit	Groupe compression	Druckstufengruppe	Grupo compresió n
13	026.34.017.00.00	1		Tubo interno	Inner tube	Tube inté rieur	Gabel Innenrohr	Tubo interior
14	020.34.313.00.00	2		Anello appoggio stelo + O-Ring	Stem supporting ring + O-Ring	Anneau appui tige + O-Ring	Anlagering fü r stange + O-Ring	Anillo de apoyo varilla + O-Ring
15	026.34.053.00.00	1		Tappo	Plug	Bouchon	Verschluß	Tapó n
16	031.34.024.00.00	1		Distanziale in nylon	Nylon spacer	Entretoise en nylon	Nylon-Distanzstü ck	Separador de nylon
17	031.34.323.00.00	4		Rosetta	Washer	Rondelle	Federring	Arandela
18	035.34.015.00.00	2		Molla	Spring	Ressort	Feder	Muelle
19	031.34.026.00.00	1		Anello centraggio	Centering ring	Bague de centrage	Zentrierring	Anillo de centraje
20	026.34.054.00.00	1		Piede forcella	Fork foot	Pied de fourche	Gabelfuß	Pata horquilla
21	020.34.308.00.00	2		Grano	Dowel	Goujon	Stift	Clavija
22	026.34.055.00.00	1		Piede forcella	Fork foot	Pied de fourche	Gabelfuß	Pata horquilla
23	020.34.320.00.00	2		Boccola Ø49/47 L 20	Bush Ø49/47 L 20	Moyeu Ø49/47 L 20	Bü chse Ø49/47 L 20	Buje Ø49/47 L 20
24	031.34.021.00.00	2		Stelo	Stem	Tige	Stange	Varilla
25	026.34.363.00.00	2		Fodero	Sleeve	Protection	Schutzstuck	Protecció n
26	031.34.020.00.00	2		Boccola ø52/48 L15	Bush ø52/48 L15	Moyeu ø52/48 L15	Bü chse ø52/48 L15	Buje ø52/48 L15
27	020.34.318.00.00	2		Distanziale	Spacer	Entretoise	Distanzstü ck	Distanciador
28	020.34.317.00.00	2		Guarnizione	Packing	Joint	Dichtung	Junta
29	020.34.316.00.00	2		Seeger Ø58,45	Circlip Ø58,45	Circlip Ø58,45	Seeger Ø58,45	Seeger Ø58,45
30	020.34.315.00.00	2		Raschiapolvere	Dust scraper	Graffe poussiere	Staubabstreifer	Esc. polvo
31	026.34.364.00.00	2		Anello d' arresto	Check ring	Bague d' arrê t	Sicherungsring	Anillo de bloqueo
32	031.34.023.00.00	1		Svincolo molla	Anti-friction spring	Anti-friction pour ressort	Anti-Reibungsfeder	Antifricció n muelle
33	026.34.056.00.00	1		Tappo	Plug	Bouchon	Verschluß	Tapó n
34	026.34.057.00.00	1		Anello	Ring	Circlips	Ring	Anillo
35	026.34.058.00.00	1		Tubo	Tube	Tuyau	Schlauch	Tubo
36	035.34.017.00.00	1		Gruppo estensione	Rebound unit	Ecrou groupe dé tente	Zugstufengruppe	Grupo rebote

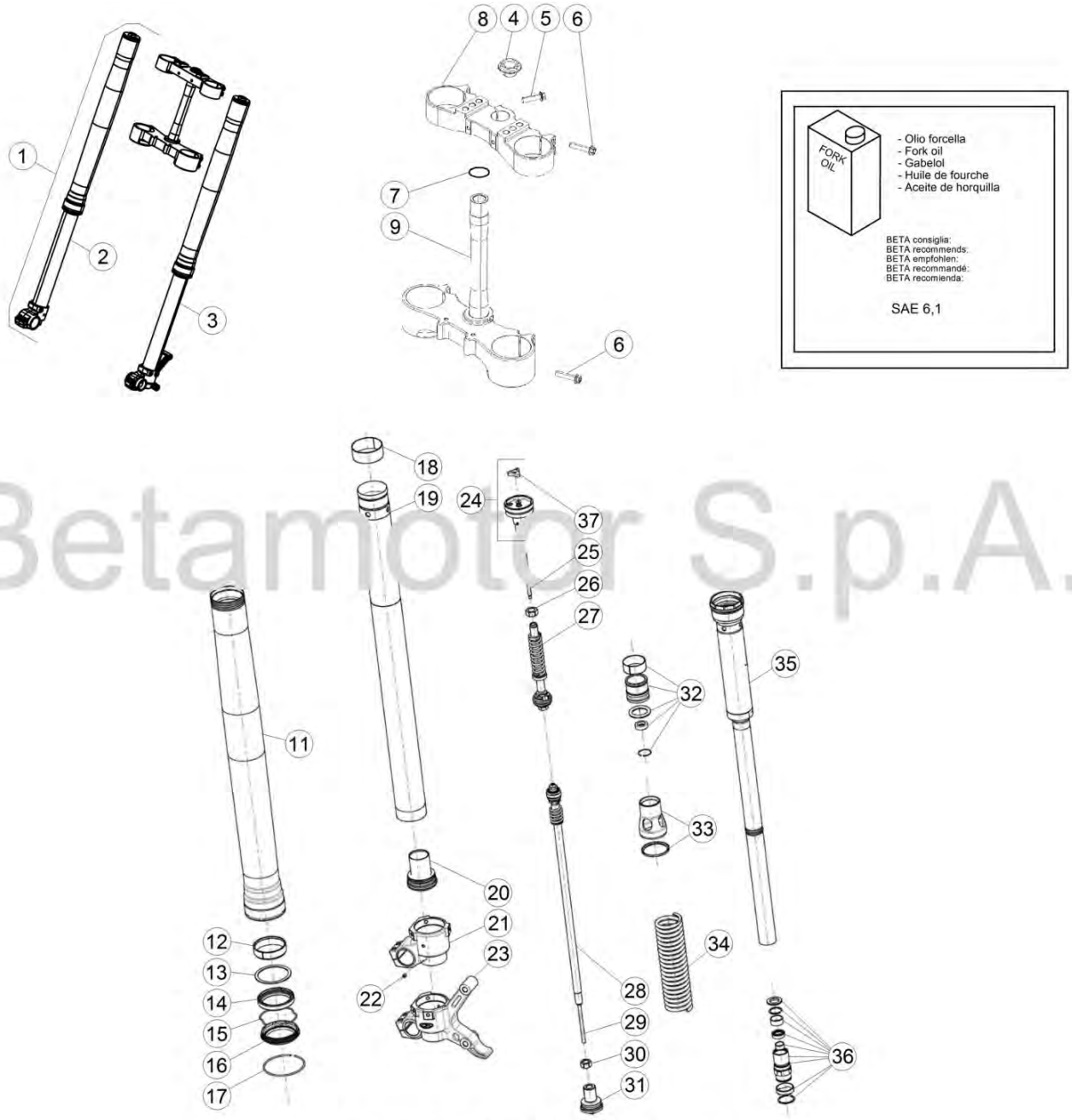

Betamotor S.p.A.

© Copyright 2016 Betamotor S.p.A.

Tav.34

Pos Loc Pos Ps Pos	Numero Number Numé ro Nú mero Nummer	Q.tà Q.ty Q.té M.ge C.ad	Nota Note Note Nota Anm.	Descrizione	Description	Dé signation	Beschreibung	Descripciò n
								RACING
1	035.34.009.82.00	1		Forcella	Frotn fork	Fourche	Schaltgabel	Horquilla
2	035.34.011.80.53	1		Gamba forcella DX	RH fork leg	Tube fourche D.	Rechte Beineinheit	Pata derecha horquilla
3	035.34.010.80.53	1		Gamba forcella SX	LH fork leg	Tube fourche G.	Linke Beineinheit	Pata izquierda horquilla
4	020.34.004.00.00	1		Dado 20X1,5	Nut 20X1,5	Ecrou 20X1,5	Mutter 20X1,5	Tuerca 20X1,5
5	11.55440.000	1		Bullone 8x30 ch10 rs	Bolt 8x30 ch10 rs	Boulon 8x30 ch10 rs	Bolzen 8x30 ch10 rs	Tornillo 8x30 ch10 rs
6	11.55510.000	8		Bullone M8x40	Bolt M8x40	Boulon M8x40	Bolzen M8x40	Tornillo M8x40
7	10.66420.000	1		Anello OR 20,22.3,53 NBR	O-Ring 20,22.3,53 NBR	Bague d'é tanché ité 20,22.3,53 NBR	O-Ring 20,22.3,53 NBR	Anillo OR 20,22.3,53 NBR
8	031.34.012.42.59	1		Piastra di stezo superiore	Steering head	Tê te de direction	Gabelkopf oben	Tija superior
9	031.34.029.82.59	1		Piastra di stezo inferiore	Steering head base	Socle de direction	Gabelkopf unten	Tija inferior
11	026.34.061.00.00	2		Fodero	Sleeve	Protection	Schutzstuck	Protecció n
12	031.34.020.00.00	2		Boccola ø52/48 L12	Bush ø52/48 L12	Moyeu ø52/48 L12	Bü chse ø52/48 L12	Buje ø52/48 L12
13	020.34.318.00.00	2		Distanziale	Spacer	Entretoise	Distanzstü ck	Distanciador
14	020.34.317.00.00	2		Guarnizione	Packing	Joint	Dichtung	Junta
15	020.34.316.00.00	2		Seeger Ø58,45	Circlip Ø58,45	Circlip Ø58,45	Seeger Ø58,45	Seeger Ø58,45
16	020.34.315.00.00	2		Raschiapolvere	Dust scraper	Graffe poussiere	Staubabstreifer	Esc. polvo
17	026.34.364.00.00	2		Seeger Ø64 filo Ø3	Circlip Ø64 filo Ø3	Circlip Ø64 filo Ø3	Seeger Ø64 filo Ø3	Seeger Ø64 filo Ø3
18	020.34.320.00.00	2		Boccola Ø49/47 L 20	Bush Ø49/47 L 20	Moyeu Ø49/47 L 20	Bü chse Ø49/47 L 20	Buje Ø49/47 L 20
19	031.34.021.00.00	2		Stelo	Stem	Tige	Stange	Varilla
20	026.34.345.00.00	2		Sede registro	Adjuster seat	Siè ge du ré glage	Sitz Einstellschraube	Asiento de la regulació n
21	026.34.054.00.00	1		Piede forcella dx	R.H. fork foot	Pied de fourche droit	Gabelfuß rechts	Pata horquilla der.
22	020.34.308.00.00	2		Grano	Dowel	Goujon	Stift	Clavija
23	026.34.055.00.00	1		Piede forcella sx	L.H. fork foot	Pied de fourche gauche	Gabelfuß links	Pata horquilla izq.
24	031.34.063.00.00	2		Gruppo tappo	Plug assy	Groupe bouchon	Verschlussgruppe Kpl	Grupo tapó n
25	026.34.347.00.00	2		Asta	Rod	Tige	Stange	Varilla
26	026.34.348.00.00	2		Dado	Nut	Ecrou	Mutter	Tuerca
27	035.34.019.00.00	2		Gruppo compressione	Compression unit	Groupe compression	Druckstufengruppe	Grupo compresió n
28	035.34.020.00.00	2		Gruppo estensione	Rebound unit	Ecrou groupe dé tente	Zugstufengruppe	Grupo rebote
29	031.34.345.00.00	2		Asse	Rod	Tige	Stange	Varilla
30	031.34.346.00.00	2		Dado	Nut	Ecrou	Mutter	Tuerca
31	031.34.347.00.00	2		Registro gruppo estensione	Rebound unit adjuster	Ré glage groupe dé tente	Einstellung Zugstufengruppe	Regulació n grupo rebote
32	026.34.354.00.00	2		Gruppo pistone	Piston assy.	Esemble piston	Gruppe Kolben	Grupo pistó n
33	026.34.355.00.00	2		Gruppo guidamolla	Spring guide, assy.	Groupe guide ressort	Gruppe Federfü hrung	Grupo guia resorte
34	035.34.015.00.00	2		Molla	Spring	Ressort	Feder	Muelle
35	035.34.021.00.00	2		Tubo	Tube	Tuyau	Schlauch	Tubo
36	031.34.349.00.00	2		Gruppo guidastelo	Guide rod assy.	Groupe guide tige	Pumpenstü ckfü hrunggruppe	Grupo guja espiga
37	031.34.350.00.00	2		Pomello	Knob	Bouton	Drehknopf	Pomo

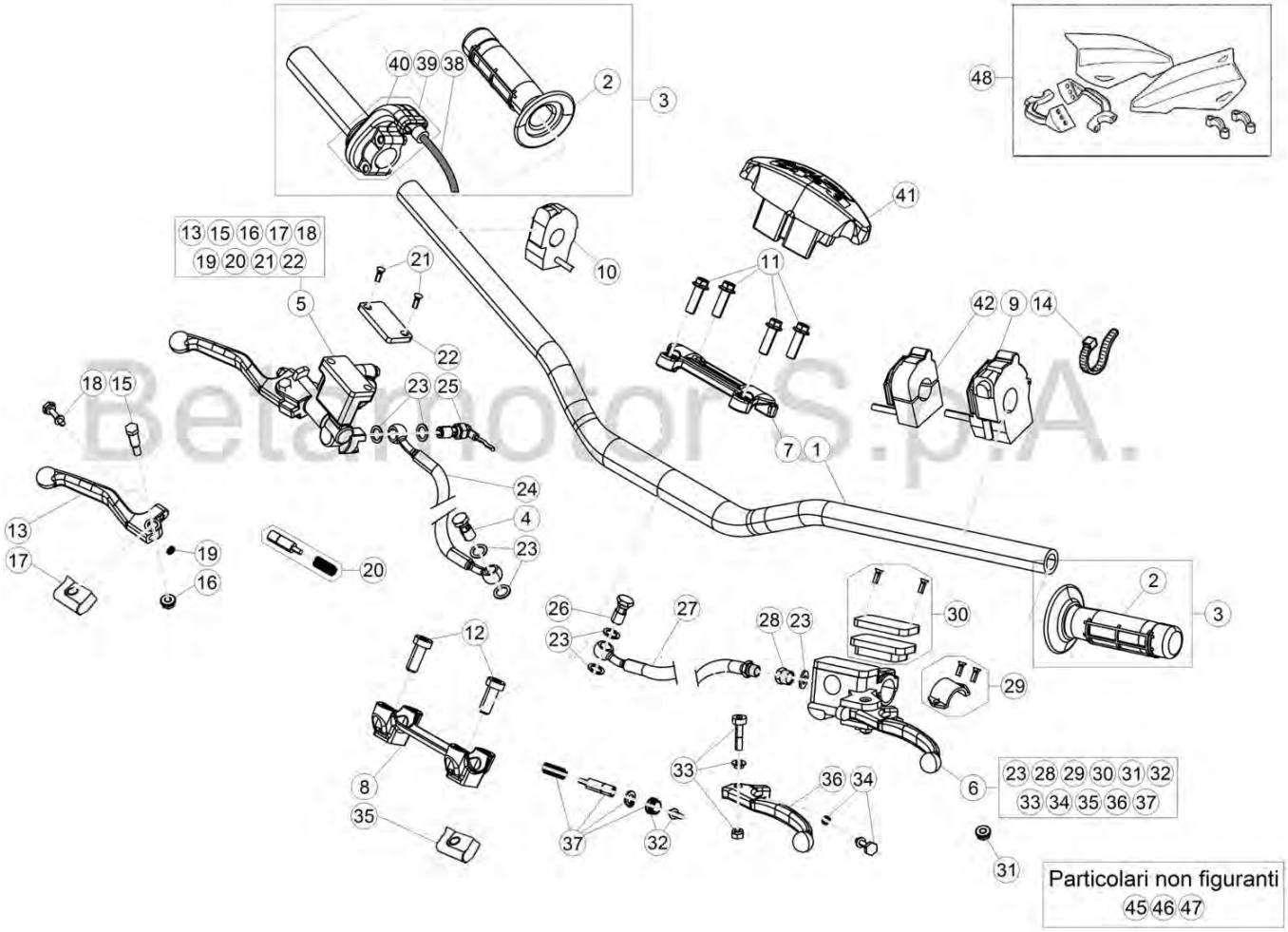

© Copyright 2018 Betamotor S.p.A.

Tav.35

Pos Loc Pos Ps Pos	Numero Number Numé ro Nú mero Nummer	Q.tà Q.ty Q.té M.ge C.ad	Nota Note Note Nota Anm.	Descrizione	Description	Dé signation	Beschreibung	Descripciò n
1	026.35.000.00.59	1		Manubrio	Handlebars	Guidon	Lenker	Manillar
2	036.35.005.00.00	1		Coppia manopole	Grips (couple)	Poigné es (couple)	Handgriffpaar	Manecilla (juego)
3	026.35.002.80.00	1		Comando gas completo	Throttle control compl.	Commande gaz compl.	Gasgriff kpl.	Accionamiento acelerador co
4	11.65053.000	1		Bullone forato 10x1,25	Pierced bolt 10x1,25	Boulon avec trou 10x1,25	Bolzen 10x1,25	Tornillo 10x1,25
5	21.02057.059	1		Leva freno ant.	Fr. br. lever	Lev. fr. AV.	Vorderradbremshebel	Pal. fr. del.
6	020.35.020.00.00	1		Leva comando frizione	Clutch control lever	Levier de commande embrayage	Kupplungshebel	Palanca mando embrague
7	12.08253.000	1		Cavallotto superiore	Upper u bolt	Etrier sup.	Obere Brü cke	Brida sup.
8	12.08263.000	1		Cavallotto inferiore	Lower u bolt	Etrier infé rieure	Untere Brü cke	Brida inferior
9	016.35.010.00.00	1		Dispositivo luci c/frecce	Lights control device with blinkers	Dispositif commande feux avec clignotants	Lichtschalter mit blinkgeber	Dispositivo mando luce con intermitentes
10	035.35.003.00.00	1		Dispositivo ON-OFF	ON-OFF device	Dispositif ON-OFF	Lichtschalter ON-OFF	Dispositivo ON-OFF
11	31.64070.000	4		Vite flangiata 8x30	Flanged screw 8x30	Vis à brides 8x30	Flanschschraube 8x30	Tornillo rebordeado 8x30
12	31.65626.000	2		Vite a brugola M10 25	Allen screw M10 25	Vis à 6 pans M10 25	Sechskantschraube M10 25	Tornillo a llave allen M10 25
13	21.27104.000	1		Leva freno	Brake lever	Levier du frein	Bremshebel	Palanca de freno
14	15.14264.000	3		Fascetta	Clamp	Collier	Schelle	Abrazadera
15	31.96832.000	1		Perno leva freno	Brake lever pin	Goujon levier frein	Bremshebelstift	Perno leva freno
16	13.30911.000	1		Dado	Nut	Ecrou	Mutter	Tuerca
17	16.33841.000	1		Coprileva	Lever cover	Couvre levier	Hebeldeckel	Cubre-palanca
18	31.88604.000	1		Vite regol. leva	Adjusting screw	Vis ré glage	Einstellschrauben	Tornillo reg.
19	22.38704.000	1		Molla registro leva freno ant.	Front brake lever adjust spring	Ressort enregistrement levier	Regelfeder vorderradbremse	Muelle regul. bomba freno
20	20.08258.000	1		Pistoncino completo pompa	Piston assy, pump	Piston compl. pompe	Kolben klpt. Pumpe	Piston completo bomba
21	31.23410.052	2		Vite fiss. coperchio	Cover sec. screw	Vis de fix. couvercle	Schraube	Tornillo
22	031.36.003.82.00	1		Coperchio serbatoio olio	Oil filler cover	Couvercle ré servoir huile	Ölverschlußdeckel	Tapa depó sito aceite
23	16.50510.000	7		Guarnizione 10x15x1 in rame	Gasket 10x15x1 copper	Joint 10x15x1 cuivre	Dichtung 10x15x1 Kupfer	Junta 10.15.1 (cobre)
24	29.09108.000	1		Tubo Freno Ant.	Front brake tube	Tuyau du frein AV.	Vordere Bremsleitung	Tubo freno delantero
25	18.89621.000	1		Interruttore stop	Stop switch	Interrupteur stop	Stopschalter	Interruptor stop
26	11.65040.000	1		Bullone forato 10x1 x tubo freno	Special bolt	Boulon 10x1 x tube frein	Hohlschraube F.Bremse	Tornillo esp. talad.10.1
27	035.35.002.00.00	1		Tubo frizione	Clutch tube	Canalisation embrague	Kupplungsrohr	Tubo embrague
28	020.35.032.00.00	1		Raccordo	Joint.p.	Raccord	Stutzen	Racor
29	020.35.025.00.00	1		Cavallotto	U bolt	Etrier	Brü cke	Brida
30	020.35.023.00.00	1		Tappo serbatoio pompa	Master cyl. tank plug	Bouchon ré servoir maî tre cylindre	Behä lterverschluß Hauptbremszylinder	Tapó n depó sito bomba freno
31	020.35.028.00.00	1		Antiemulsione	Antiemulsion	Antiemulsion	Eulsionswidriger	Antiemulsion
32	020.35.029.00.00	1		Puntalino leva pompa	Push piece	Piece de pression	Druckstü ck	Varilla de presió n
33	020.35.024.00.00	1		Perno leva	Lever pin	Goujon levier	Hebelstift	Perno palanca
34	020.35.030.00.00	1		Guidamolla	Spring guide	Guide ressort	Federfü hrung	Guia resorte
35	020.35.027.00.00	1		Gomma protezione leva	Lever protection grommet	Caoutchouc protection levier	Gummi Hebelschutz	Goma protecció n palanca
36	020.35.022.00.00	1		Leva frizione nuda	Clutch lever, only	Levier d' embrayage nue	Kupplungshebel	Palanca embrague
37	020.35.026.00.00	1		Kit pistoncino pompa	Piston kit master cyl.	Kit piston. maî tre cyl.	Kolbensatz hauptbremszylinder	Kit pistó n bomba
38	026.35.011.82.00	1		Cavo comando gas	Throttle cable transmission	Transmission commande gaz	Bowdenzü g gasgriff	Transmisió n mando gas
39	026.35.010.00.00	1		Comando gas	Throttle control	Commande gaz	Gasdrehgriff	Mando gas
40	031.35.013.00.00	1		Protezione	Protection	Protection	Schutz	Protecció n
41	031.35.001.00.00	1		Protezione manubrio	Handlebar protection	Protection guidon	Lenkerschutz	Protecció n manillar
42	031.40.003.00.00	1		Dispositivo switch mappa CDI	Switch for double map CDI	Selecteur mappe CDI	Mappingschalter CDI	Conmutador para cambiar el
45	12.30100.000	1	EU	Cavallotto leva freno c/attacco specchio	Brake lever U-bolt w/mirror fastening	Etrier levier du frein avec fixation retroviseur	Brü cke Bremshebel mit Befestigung fü r Rü ckblickspiegel	Brida palanca freno con anclaje espejo
46	28.92927.000	1	EU	Specchio retrovisore dx.	R.H. rear mirror	Ré troviseur dr.	Rü ckspiegel R.	Retrovisor der.
47	031.35.008.00.00	1	EU	Specchio retrovisore sx.	L.H. rear mirror	Ré troviseur ga.	Rü ckspiegel L.	Retrovisor izq.
48	026.46.005.82.51	1	RACING	Kit paramani	Hand guards kit	Kit pare-mains	Kit Handshutz	Kit para manos

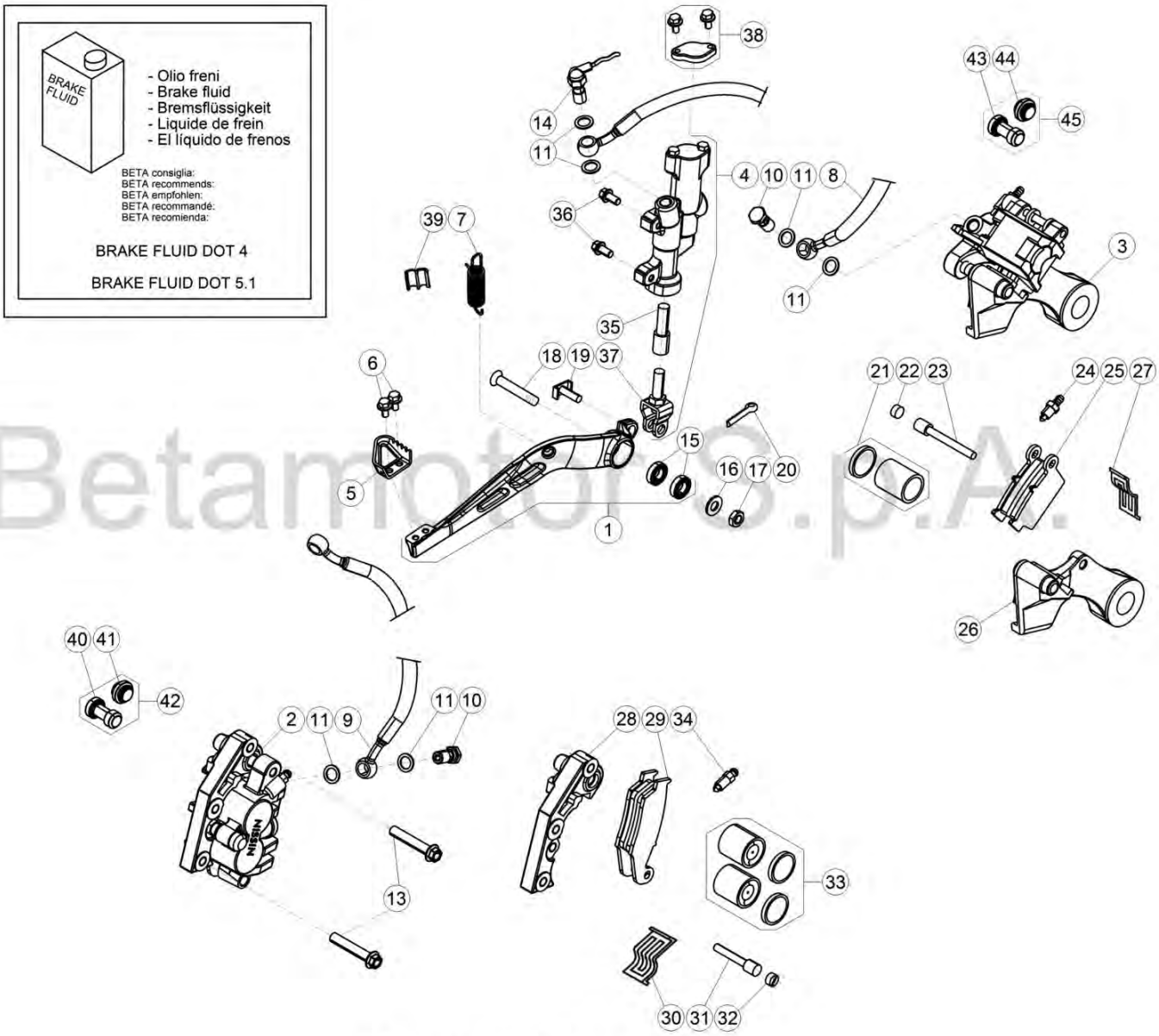

Betamotor S.p.A.

© Copyright 2018 Betamotor S.p.A.

Tav.36

Pos Loc Pos Ps Pos	Numero Number Numéro Número Nummer	Q.tà Q.ty Q.té M.ge C.ad	Nota Note Note Nota Anm.	Descrizione	Description	Désignation	Beschreibung	Descripciòn
1	020.36.001.80.00	1		Leva freno	Brake lever	Levier du frein	Fussbremshebell	Palanca freno
1	020.36.001.80.59	1	RACING	Leva freno	Brake lever	Levier du frein	Fussbremshebell	Palanca freno
2	25.03056.000	1		Pinza freno anteriore	Front disk brake caliper	Etrier de frein AV.	Bremszange-Scheibe	Pinza freno del.
3	25.03066.000	1		Pinza freno posteriore	Rear disk brake caliper	Etrier de frein AR.	Bremszange	Pinza del freno tras.
4	25.91178.000	1		Pompa freno posteriore	Rear brake cylinder	Maî tre cylindre frein ar.	Hauptbremszylinder Hinterradbremse	Bomba freno trasero
5	22.90053.000	1		Mozzetto	Hub	Moyeu	Nabe	Cubo
6	11.46251.000	2		Bullone flangiato M5x12	Head Flanged bolt M5x12	Boulon Bridé M5x12	Bundbolzen M5x12	Buló n con Brida M5x12
7	026.36.000.00.00	1		Molla ritorno pedale freno	Return brake pedal spring	Ressort de retour frein	Bremspedal Feder	Muelle retorno palanca freno
8	29.09428.000	1		Tubo Freno Posteriore	Rear brake tube	Tuyau du frein AR.	Hintere Bremsleitung	Tubo freno trasero
9	29.09108.000	1		Tubo Freno Ant.	Front brake tube	Tuyau du frein AV.	Vordere Bremsleitung	Tubo freno delantero
10	11.65053.000	2		Bullone forato 10x1,25	Pierced bolt 10x1,25	Boulon avec trou 10x1,25	Bolzen 10x1,25	Tornillo 10x1,25
11	16.50510.000	6		Guarnizione 10x15x1 in rame	Gasket 10x15x1 copper	Joint 10x15x1 cuivre	Dichtung 10x15x1 Kupfer	Junta 10.15.1 (cobre)
13	11.55510.000	2		Bullone M8x40 ch10 rs	Bolt M8x40 ch10 rs	Boulon M8x40 ch10 rs	Bolzen M8x40 ch10 rs	Tornillo M8x40 ch10 rs
14	18.89621.000	1		Interruttore stop	Stop switch	Interrupteur stop	Stopschalter	Interruptor stop
15	12.93388.000	2		Cuscinetto 8x22x7	Bearing 8x22x7	Roulement 8x22x7	Lager 8x22x7	Cojinete 8x22x7
16	27.49500.000	1		Rondella 8x18	Washer 8x18	Rondelle 8x18	U.Scheibe 8x18	Arandela 8x18
17	13.17020.000	1		Dado autoblocc. Basso M8	Nut M8	Ecrou M8	Mutter M8	Tuerca M8
18	31.63985.000	1		Vite TSPCE 8.50 CL 10.9	Screw TSPCE 8.50 CL 10.9	Vis TSPCE 8.50 CL 10.9	Schraube TSPCE 8.50 CL 10.9	Tornillo TSPCE 8.50 CL 10.9
19	25.41830.000	1		Forcellino	Clip	Ressort	Fixiergabel	Horquilla
20	12.81995.000	1		Copiglia 2x15	Split pin 2x15	Goupille 2x15	Splint 2x15	Grupilla 2x15
21	20.02717.000	1		Kit pistoncini e guarniz. Pinza	Piston e oil seal for pliers	Jeu petit pistons et joint pinces	Reparatursatz Bremszange	Juego piston y guarnicion pinza
22	31.96821.000	1		Grano	Dowel	Goujon	Stift	Clavija
23	25.41860.000	1		Perno ancoraggio pastiglia	Pin hanger	Pivot ancrage	Halter brehsbelage	Varilla esp. Pastillas pinzas
24	28.91002.000	1		Sfiato	Breather	Reniflard	Entlüfter	Respiradero
25	25.25362.000	1		Pastiglie freno post.	Rear brake pads	Pastill. de freins AR.	Hinterbremsbelag	Pastillas frenos tras.
26	020.36.011.00.00	1		Staffa supporto pinza	Caliper support bracket	Bride support étrier	Bremssattelbefestigung	Brida soporte pinza
27	22.32208.000	1		Molla ferma pastiglie pinza	Brake pads spring for pliers	Ressort arret plaquettes	Haltefeder	Muelle pastillas pinza
28	020.36.012.00.00	1		Staffa supporto pinza	Caliper support bracket	Bride support étrier	Bremssattelbefestigung	Brida soporte pinza
29	25.25361.000	1		Pastiglie freno ant.	Front brake pads	Pastill. de freins AV.	Vorderbremsbelag	Pastillas frenos del.
30	22.32207.000	1		Molla ferma pastiglie pinza	Brake pads spring for pliers	Ressort arret plaquettes	Haltefeder	Muelle pastillas pinza
31	25.41859.000	1		Perno ancoraggio pastiglia	Pin hanger	Pivot ancrage	Halter brehsbelage	Varilla esp. Pastillas pinzas
32	31.96821.000	1		Grano	Dowel	Goujon	Stift	Clavija
33	20.02716.000	1		Kit pistoncini e guarniz. Pinza	Piston e oil seal for pliers	Jeu petit pistons et joint pinces	Reparatursatz Bremszange	Juego piston y guarnicion pinza
34	28.91001.000	1		Sfiato	Breather	Reniflard	Entlüfter	Respiradero
35	20.08276.000	1		Kit pistoncino pompa post.	Piston kit rear master cyl.	Kit piston. maî tre cyl. AR.	Kolbensatz hinterhauptbremszylinder	Kit pistón bomba tras.
36	31.30750.000	2		Vite M6x16	Screw M6x16	Vis M6x16	Schraube M6x16	Tornillo M6x16
37	20.08277.000	2		Kit leva	lever kit	Jeu levier	Hebelsatz	Juego palanca
38	20.08275.000	1		Kit serbatoio pompa	Kit, pump tank	Kit reservoir pompe	Deckel pumpstage	Kit deposito bomba
39	25.24442.000	1		Passacavo 6/8	Fair lead 6/8	Passe-fils 6/8	Kabelführung 6/8	Pasa-cable 6/8
40	036.36.002.00.00	1		Protezione	Protection	Protection	Schutzstück	Protección
41	036.36.003.00.00	1		Protezione	Protection	Protection	Schutzstück	Protección
42	036.36.006.82.00	1		Kit protezioni anteriore	Font protections kit	Jeu protections avant	Kit Vorne Schutzstück	Juego protecciónes delanteras
43	036.36.004.00.00	1		Protezione	Protection	Protection	Schutzstück	Protección
44	036.36.005.00.00	1		Protezione	Protection	Protection	Schutzstück	Protección
45	036.36.007.82.00	1		Kit protezioni posteriore	Rear protections kit	Jeu protections arrière	Kit Hintere Schutzstück	Juego protecciónes traseras

Tav.37

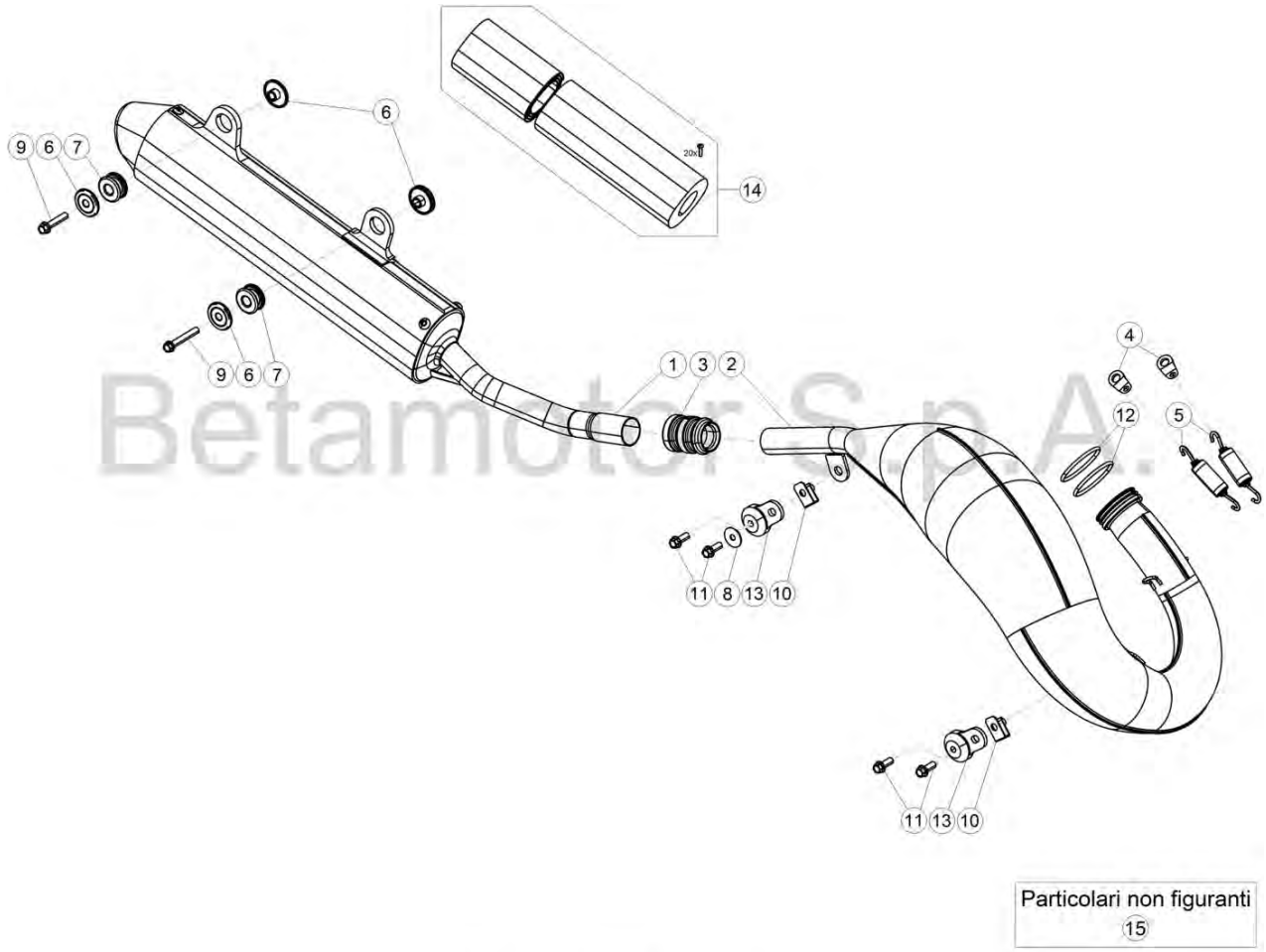

© Copyright 2018 Betamotor S.p.A.

Pos Loc Pos Ps Pos	Numero Number Numé ro Nú mero Nummer	Q.tà Q.ty Q.té M.ge C.ad	Nota Note Note Nota Anm.	Descrizione	Description	Dé signation	Beschreibung	Descripciò n
1	035.37.001.80.00	1		Silenziatore completo	Silencer complete	Silencieux complet	Endschalldä mpfer	Silenciador completo
2	035.37.018.80.00	1		Marmitta	Exhaust	Pot d' echappement	Auspuffops	Silenciador
2	035.37.021.80.00	1	RACING	Marmitta	Exhaust	Pot d' echappement	Auspuffops	Silenciador
3	035.37.002.00.00	1		Guarnizione silenziatore	Exhaust gasket	Joint pot d' echappement	Dichtung	Goma silenciador
4	25.57912.000	2	RACING	Piastrina fissaggio molla	Spring fixing plate	Plaquette é lastique fix. ressort	Befestigugsplä tte Krummerfeder	Pletina elá stica fij. muelle
5	026.37.005.00.00	2		Molla tubo di scarico	Exhaust pipe spring	Ressort tuyau echapp.	Krummerfeder	Muelle tubo de escape
6	026.37.006.00.00	4		Distanziale	Spacer	Entretoise	Distanzstü ck	Distanciador
7	032.37.013.00.00	2		Silent-bloc	Silentbloc	Silentbloc	Puffer	Silent-block
8	27.42000.000	2		Rondella 6x18	Washer 6x18	Rondelle 6x18	U.Scheibe 6x18	Arandela 6x18
9	11.50300.000	2		Bullone 6x30 ch rs	Bolt 6x30 ch rs	Boulon 6x30 ch rs	Bolzen 6x30 ch rs	Tornillo 6x30 ch rs
10	25.60311.000	2		Piastrina elastica M6	Spring plate M6	Plaquette é lastique M6	Plä ttchen M6	Pletina elá stica M6
11	11.48025.000	4		Bullone M6x16	Bolt M6x16	Boulon M6x16	Bolzen M6x16	Tornillo M6x16
12	C02.06.065.00.00	2		Anello di tenuta VITON 38.3	Oil seal VITON 38.3	Joint d' é tanché ité VITON 38.3	Ölschutzring VITON 38.3	Reté n de aceite VITON 38.3
12	10.66930.000	2	RACING	Anello OR 43.3	Ring OR 43.3	Circlips OR 43.3	Ring OR 43.3	Anillo OR 43.3
13	28.91943.000	2		Silent block marmitta	Silencer puffer	Silent block silencieux	Silent block Auspuff	Silent block escape
14	036.37.110.82.00	1		Kit revisione silenziatore	Kit for silencer overhauling	Kit ré v. Silencieux	Reparatursatz Schalldä mpfer	Kit revisió n silenciador
15	035.37.003.80.00	1	STD-EU	Marmitta	Exhaust	Pot d' echappement	Auspuffops	Silenciador
15	035.37.026.80.00	1	RACING-EU	Marmitta	Exhaust	Pot d' echappement	Auspuffops	Silenciador

Tav.38

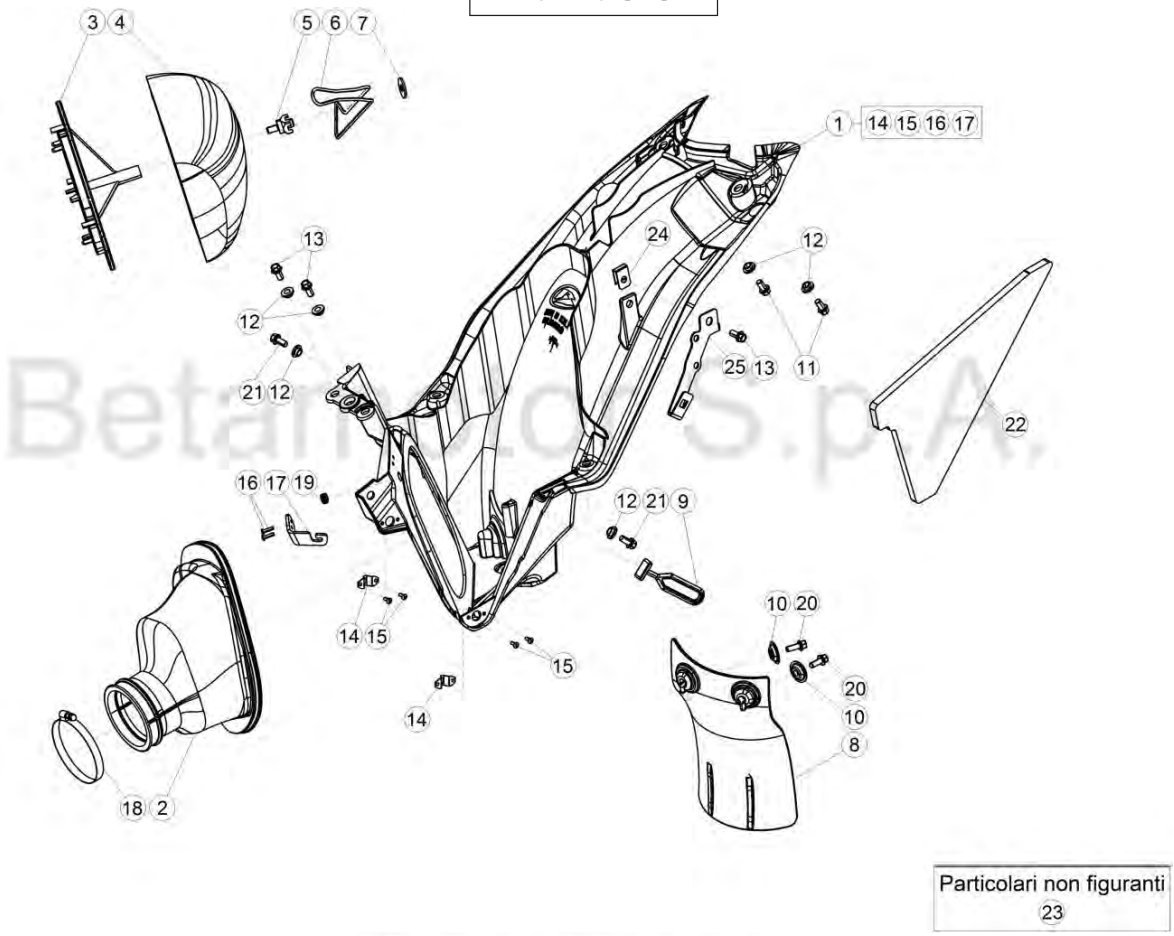

© Copyright 2017 Betamotor S.p.A.

Pos Loc Pos Ps Pos	Numero Number Numé ro Nú mero Nummer	Q.tà Q.ty Q.té M.ge C.ad	Nota Note Note Nota Anm.	Descrizione	Description	Dé signation	Beschreibung	Descripciò n
1	026.38.012.80.59	1		Scatola filtro completa	Air cleaner box	Boî tier filtre à air	Luftfiltergehä use	Caja filtro de aire
2	035.38.001.00.00	1		Manicotto scatola filtro	Filter box sleeve	Manchon boî te du filtre	Filtergehä usemuffe	Manguito caja filtro
3	026.38.002.00.00	1		Gabbia filtro aria	Filter cage	Grille filtre aire	Filter kafig	Jaula filtro aire
4	031.38.001.00.00	1		Filtro aria	Air filter	Filtre à air	Luftfilter	Filtro de aire
5	25.57197.000	1		Perno richiamo ferma-filtro	Filter pin	Pivot filtre	Filtershalter	Pin Eje filtro
6	020.38.021.00.00	1		Molla fermafiltro	Filter spring	Ressort filtre	Filter Feder	Muelle filtro
7	27.74800.000	1		Rondella autobloccante 9	Washer 9	Rondelle 9	Scheibe 9	Arandela 9
8	026.38.007.10.59	1		Protezione ammortizzatore	Rear damper protection	Protection amortisseur	Stossdä mpferschutz	Protecció n amortiguador
9	16.34907.000	1		Gommino	Rubber buffer	Caoutchouc	Gummi	Goma
10	27.74786.000	2		Rondella bombata	Kasher	Rondelle	Scheibe	Arandela
11	31.79960.000	2		Vite autofilettante M6x15	Self tapping screw M6x15	Vis taraud M6x15	Schraube, Blech M6x15	Tornillo autorrosc. M6x15
12	13.54820.000	6		Distanziale 6,5x9,0x13,5	Spacer 6,5x9,0x13,5	Entretoise 6,5x9,0x13,5	Distanzstü ck 6,5x9,0x13,5	Distanciador 6,5x9,0x13,5
13	11.47015.000	3		Bullone M6x12	Bolt M6x12	Boulon M6x12	Bolzen M6x12	Tornillo M6x12
14	026.38.004.00.00	2		Ricettacolo	Receptacle	Rè ceptacle	Behä lter	Receptaculo
15	C18.19.009.00.00	4		Rivetto a strappo 2,4x8	Rivet 2,4x8	Rivet 2,4x8	Niet 2,4x8	Remache 2,4x8
16	27.33803.000	2		Rivetto a strappo 3,2.11 acciaio	Rivet 3,2.11 steel	Rivet 3,2.11 acier	Niet 3,2.11 stahl	Remache 3,2.11 acero
17	020.38.002.00.00	1		Braccetto	Arm	Bras	Kleine Stü tze	Brazo
18	15.14272.000	1		Fascetta raccordo aspirazione	Connecting hose clamp	Collier tuyau d' aspiration	Schelle Schlauchstutzen	Abrazadera tubul. de empalme
19	16.34906.000	1		Gommino	Rubber buffer	Caoutchouc	Gummi	Goma
20	31.30815.000	2		Vite autofilettante 6x20	Self tapping screw 6x20	Vis taraud 6x20	Schraube, Blech 6x20	Tornillo autorrosc. 6x20
21	11.48025.000	2		Bullone 6x16 ch 8 rs	Bolt 6x16 ch 8 rs	Boulon 6x16 ch 8 rs	Bolzen 6x16 ch 8 rs	Tornillo 6x16 ch 8 rs
22	031.38.015.00.00	1		Spugna	Sponge	Eponge	Schwamm	Esponja
23	021.38.019.00.00	1	EU	Filtro aria	Air filter	Filtre à air	Luftfilter	Filtro de aire
24	25.60311.000	1		Piastrina filettata M6	Threaded plate M6	Plaquette filetté e M6	Gewindeplatte M6	Placa de tuerca M6
25	031.40.127.22.00	1		Staffa	Bracket	Bride	Befestigung	Brida

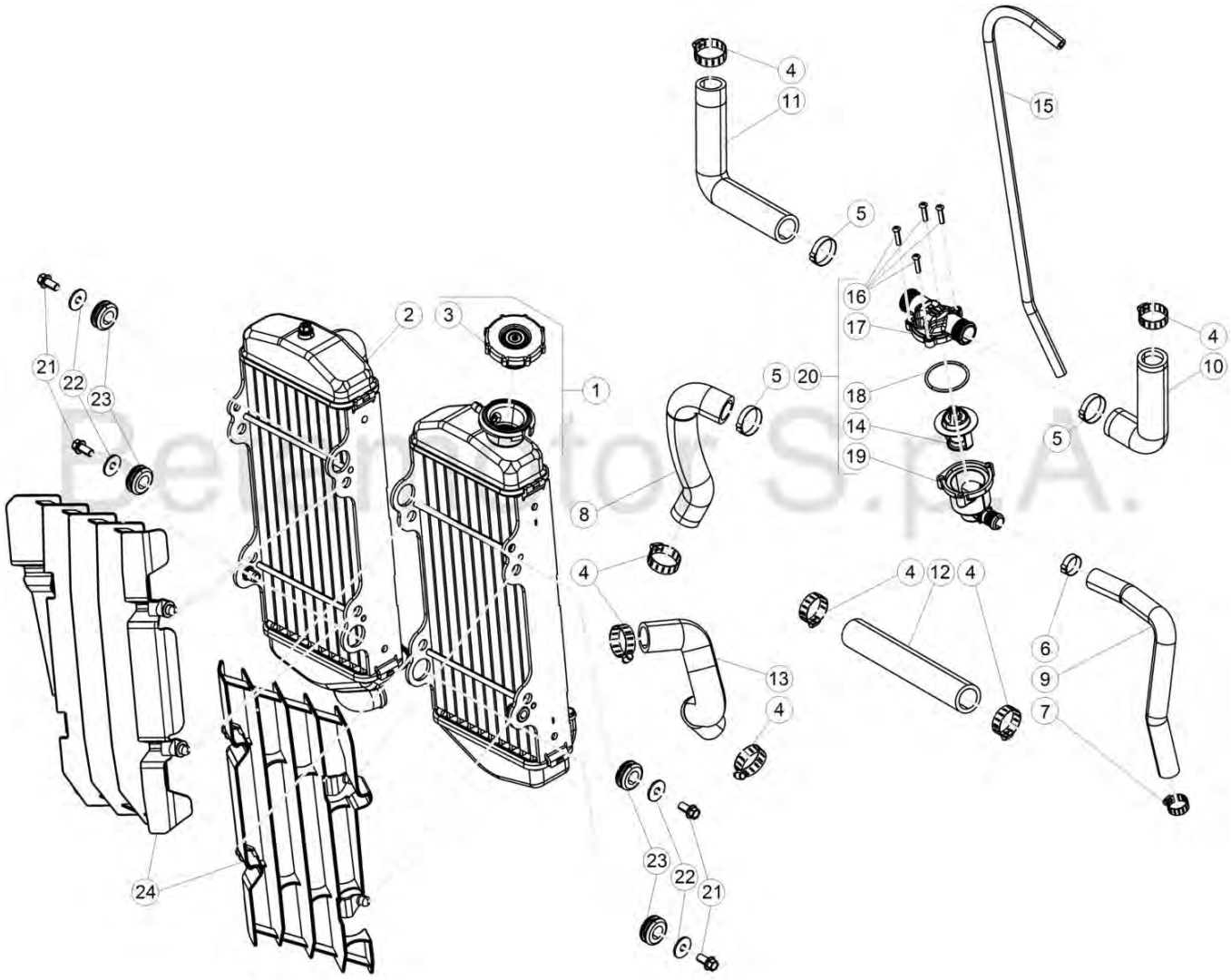

© Copyright 2017 Betamotor S.p.A.

Tav.39

Pos Loc Pos Ps Pos	Numero Number Numé ro Nú mero Nummer	Q.tà Q.ty Q.té M.ge C.ad	Nota Note Note Nota Anm.	Descrizione	Description	Dé signation	Beschreibung	Descripciò n
1	035.39.001.80.00	1		Radiatore sx	L.H. radiator	Radiateur G.	L., Kü hler	Radiador iz.
2	035.39.000.00.00	1		Radiatore dx	R.H. radiator	Radiateur D.	R., Kü hler	Radiador der.
3	035.39.005.80.00	1		Tappo radiatore	Radiator plug	Bouchon radiateur	Kü hlerdeckel	Tapa de radiador
4	15.15240.000	7		Fascetta 19/28	Clamp 19/28	Collier 19/28	Schelle 19/28	Abrazadera 19/28
5	020.39.008.00.00	3		Fascetta 24	Clamp 24	Collier 24	Schelle 24	Abrazadera 24
6	020.39.009.00.00	1		Fascetta 17	Clamp 17	Collier 17	Schelle 17	Abrazadera 17
7	15.15220.000	1		Fascetta 12/22	Clamp 12/22	Collier 12/22	Schelle 12/22	Abrazadera 12/22
8	035.39.002.00.00	1		Tubo termostato	Thermostat pipe	Canalisation thermostat	Leitung Thermostat	Tubo termostato
9	026.39.002.00.00	1		Tubo inf. Termostato	Thermostat lower hose	Tube inf. interrupteur termique	Thermostatschlauch, unten	Tubo inf. Termostato
10	026.39.022.00.00	1		Tubo termostato sx	L.H. Thermostat hose	Tuyau interr. termique G.	Leitung Thermostat li.	Tubo termostato izq.
11	026.39.021.00.00	1		Tubo termostato dx	R.H. Thermostat hose	Tuyau interr. termique D.	Leitung Thermostat re.	Tubo termostato der.
12	026.39.005.00.00	1		Tubo inferiore radiatori	Lower radiators tube	Tube radiateurs inf.	Wasserschlauch Kü hler unten	Tubo radiadores inferior
13	035.39.003.00.00	1		Tubo pompa acqua	Water pump pipe	Tube pompe eau	Leitung wasserpumpe	Tubo bomba agua
14	026.39.013.00.00	1		Termostato	Bimetal, thermostatic	Thé rmostat	Thermostat	Termostato
15	026.39.007.00.00	1		Tubo sfiato sovra pressione	Breather pipe	Tuyau vidange	Kü hlerentlü ftungsrohr	Tubo ventilació n
16	031.39.017.50.00	4		Vite	Screw	Vis	Schraube	Tornillo
17	031.39.016.00.00	1		Coperchio termostato	Thermostat cover	Couvercle du thermostat	Thermostatabdeckung	Tapa del termostato
18	10.66830.000	1		Anello OR 32.2	Ring OR 32.2	Circlips OR 32.2	Ring OR 32.2	Anillo OR 32.2
19	031.39.015.00.00	1		Contenitore termostato	Thermostat container	Logement interrupteur termique	Rahmen Thermostatschlauch	Plá stico termostato
20	026.39.020.80.00	1		Termostato completo	Thermostat, assy	Thermostat complet	Thermostat komplett	Termostato compl.
21	11.47015.000	4		Bullone M6x12	Bolt M6x12	Boulon M6x12	Bolzen M6x12	Tornillo M6x12
22	27.43250.000	4		Rondella 6x24	Washer 6x24	Rondelle 6x24	U.Scheibe 6x24	Arandela 6x24
23	035.39.006.00.00	4		Silent-block	Silent-block	Silent-block	Puffer	Silent-block
24	036.39.007.00.51	1		Ggriglia radiatore	Radiator grill	Calandre	Kü hlergrill	Reja del radiador

GR. COMPONENTI ELETTRICI/CABLAGGI

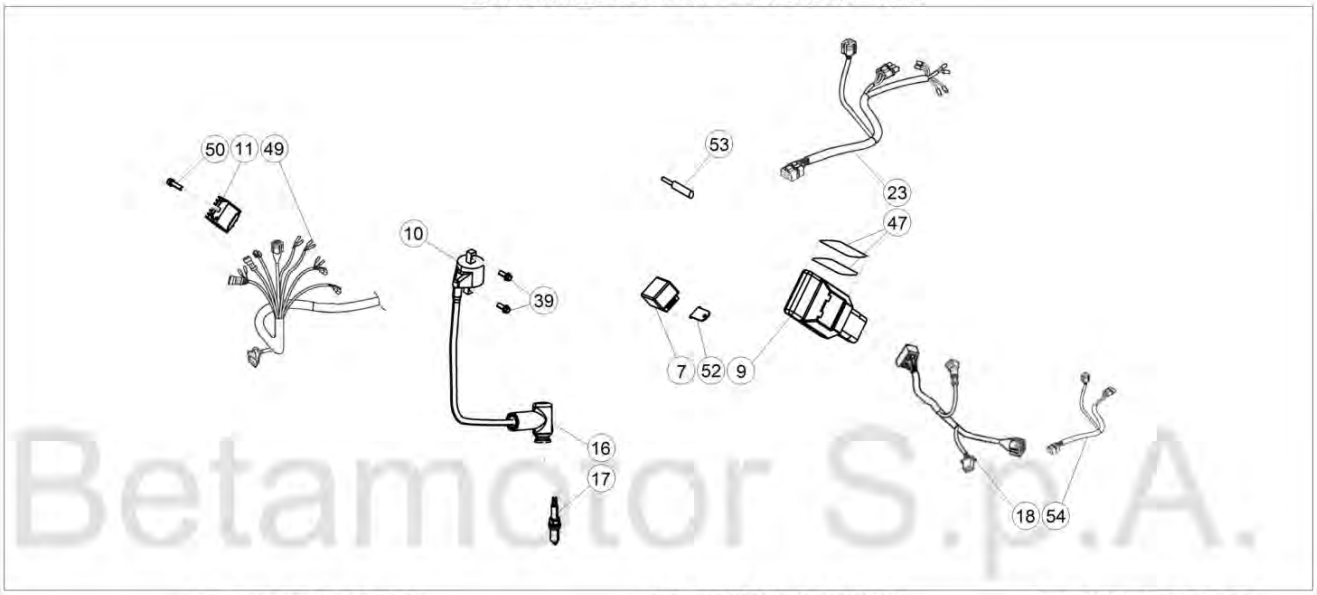

Betamotor S.p.A.

GR. LUCI/INDICATORI

GR. STRUMENTAZIONE

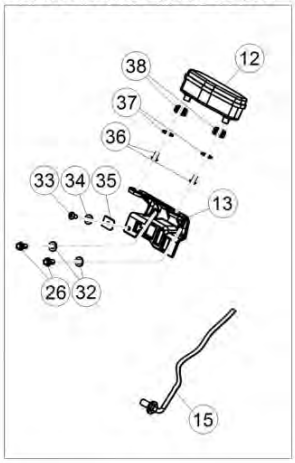

GR. AVV. ACUSTICO

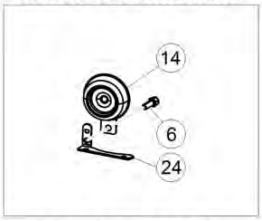

GR. ACCESSORI

© Copyright 2017 Betamotor S.p.A.

Tav.40

Pos Loc Pos Ps Pos	Numero Number Numéro Número Nummer	Q.tà Q.ty Q.té M.ge C.ad	Nota Note Note Nota Anm.	Descrizione	Description	Désignation	Beschreibung	Descripción
1	031.40.006.00.00	1		Gruppo ottico	Semi sealed beam unit	Groupe optique	Scheinwerfer	Grupo óptico
2	020.40.061.00.00	2		Indicatore dir. ant. sx.-post. Dx	Turn signal L.H.front-R.H.rear	Clignotant av.g.-ar.dr.	Blink. Vorderer links-Hinterer rechts	Indicador del. izq.-tras. der.
3	020.40.060.00.00	2		Indicatore dir. ant. dx.-post. Sx	Turn signal R.H.front-L.H.rear	Clignotant av.dr.-ar.g.	Blink.Vorderer rechts-Hinterer links	Indicador del. der.-tras. izq.
4	020.40.030.80.00	1		Fanalino posteriore a led	LED tail lamp	Feu AR. à diodes	LED-Rücklicht	Piloto a LED
5	020.40.020.00.00	1		Luce Targa	Plate Illumination	Éclairage De Plaque	Kennzeichen-Beleuchtung	Ilumnación Placa
6	11.46501.000	1		Bullone 6x10	Bolt 6x10	Boulon 6x10	Bolzen 6x10	Tornillo 6x10
7	18.84948.000	1		Intermittenza	Unit turn signal lamps	Disp. comm. clignot.	Blinkgeber	Disp. intermitentes
8	27.34650.000	3		Rondella 4.9	Washer 4.9	Rondelle 4.9	U.Scheibe 4.9	Arandela 4.9
9	035.40.001.82.00	1		Centralina digitale	CDI unit	Bobine digital (C.D.I.)	Steuergerät	Centralita digital
9	035.40.004.82.00	1	RACING	Centralina digitale	CDI unit	Bobine digital (C.D.I.)	Steuergerät	Centralita digital
10	007.40.044.00.00	1		Bobina accensione	Ignition coil	Bobine allumage	Zuendspule	Bobina de encendido
11	27.28101.000	1		Regolatore	Regulator	Régulateur	Regler	Regulador
12	026.40.029.00.00	1		Strumento digitale	Digital instrument	Instrument numérique	Digitalinstrument	Instrumento digital
13	031.40.011.00.00	1		Supporto strumento	Instrument holder	Support instruments	Instrumentenhalter	Soporte instrumentos
14	007.40.050.00.00	1		Avvisatore acustico	Warning horn	Avertisseur sonore	Hupe	Claxon
15	28.79013.000	1		Sensore REED	REED sensor	Sensor REED	Sensor	Sensor REED
16	27.13514.000	1		Raccordo candela	Plug fitting	Raccord bougie	Kerzenanschluß	Racor bují a
17	12.25126.000	1		Candela	Spark.plug	Bougie	Zündkerze	Bujia
18	035.40.008.00.00	1		Impianto elettrico principale	Main electric wiring	Câblage électrique principale	Hauptelektroverkabelung	Cableado eléctrico principal
23	031.40.042.00.00	1		Impianto posteriore	Rear harness	Circuit post.	Anlage hinten	Instalación tras.
24	036.40.010.40.59	1		Staffa avvisatore acustico	Horn bracket	Bride avertisseur	Hupebefestigung	Brida claxon
26	11.47015.000	2		Bullone M6x12	Bolt M6x12	Boulon M6x12	Bolzen M6x12	Tornillo M6x12
27	15.14654.000	1		Fascetta	Clamp	Collier	Schelle	Abrazadera
28	25.24442.000	3		Passacavo 6/8	Fair lead 6/8	Passe-fils 6/8	Kabelführung 6/8	Pasa-cable 6/8
29	25.24443.000	3		Passacavo 6/6	Fair lead 6/6	Passe-fils 6/6	Kabelführung 6/6	Pasa-cable 6/6
30	15.14264.000	4		Fascetta	Clamp	Collier	Schelle	Abrazadera
32	13.54820.000	2		Distanziale 6,5x9,0x13,5	Spacer 6,5x9,0x13,5	Entretoise 6,5x9,0x13,5	Distanzstück 6,5x9,0x13,5	Distanciador 6,5x9,0x13,5
33	31.23530.000	1		Vite M4,2x16 TMTIC autofilettante	Self tapping screw M4,2x13 TMTIC	Vis taraud M4,2x13 TMTIC	Schraube Blech M4,2x13 TMTIC	Tornillo M4,2x13 TMTIC autorroscante
34	27.34800.000	1		Rondella grower 4x16	Grower washer 4x16	Rondelle Grower 4x16	Federring Grower 4x16	Arandela elástica Grower 4x16
35	25.58090.000	1		Piastrina elastica	Spring plate	Plaquette élastique	Plättchen	Pletina elástica
36	31.26190.000	2		Vite M4x12 TCIC	Screw M4x12 TCIC	Vis M4x12 TCIC	Schraube M4x12 TCIC	Tornillo M4x12 TCIC
37	020.40.812.00.00	2		Distanziale 5x15	Spacer 5x15	Entretoise 5x15	Distanzstück 5x15	Distanciador 5x15
38	031.40.013.00.00	2		Gommino	Rubber buffer	Caoutchouc	Gummi	Goma
39	11.48025.000	6		Bullone 6x16 ch 8 rs	Bolt 6x16 ch 8 rs	Boulon 6x16 ch 8 rs	Bolzen 6x16 ch 8 rs	Tornillo 6x16 ch 8 rs
42	11.46251.000	2		Bullone flangiato M5x12	Head Flanged bolt M5x12	Boulon Bridé M5x12	Bundbolzen M5x12	Buló n con Brida M5x12
43	13.12550.000	4		Dado flangiato M6	Flanged nut M6	Ecrou bordé M6	Flanschmutter M6	Tuerca embridada M6
44	31.23565.000	1		Vite 4,5x15 TCCCR	Screw 4,5x15 TCCCR	Vis 4,5x15 TCCCR	Schraube 4,5x15 TCCCR	Tornillo 4,5x15 TCCCR
45	31.26190.000	3		Vite M4x12 TCIC	Screw M4x12 TCIC	Vis M4x12 TCIC	Schraube M4x12 TCIC	Tornillo M4x12 TCIC
46	026.40.009.00.00	1		Elastico fissaggio batteria	Battery elastic strap	Sangle batterie	Gummiband Batteriebefestigung	Elástico sujeta baterí a
47	29.10317.000	2		Tampone	Buffer	Silentbloc	Puffer	Silent-block
49	026.40.038.00.00	1		Impianto elettrico servizi anteriore	Front services electrical wiring	Câblage services avant	Elektrische Verkabelung Verbaucher vorne	Cableado eléctrico de los servicios delantero
50	11.49070.000	1		Bullone 6x20 ch rs	Bolt 6x20 ch rs	Boulon 6x20 ch rs	Bolzen 6x20 ch rs	Tornillo 6x20 ch rs
52	031.40.002.22.00	1		Piastrina per intermittenza	Plate (flash device)	Plaque intermittence	Platte Blinkgeber	Placa intermitencia
53	031.40.051.00.00	1		Condensatore	Condenser	Condensateur	Kondensator	Condensador
54	026.40.057.00.00	1		Impianto elettrico diagnosi	Diagnosys wiring	Câblage pour diagnosis	Diagnosys Kabelbaum Steuergerät	Cableado diagnosi

Tav.41

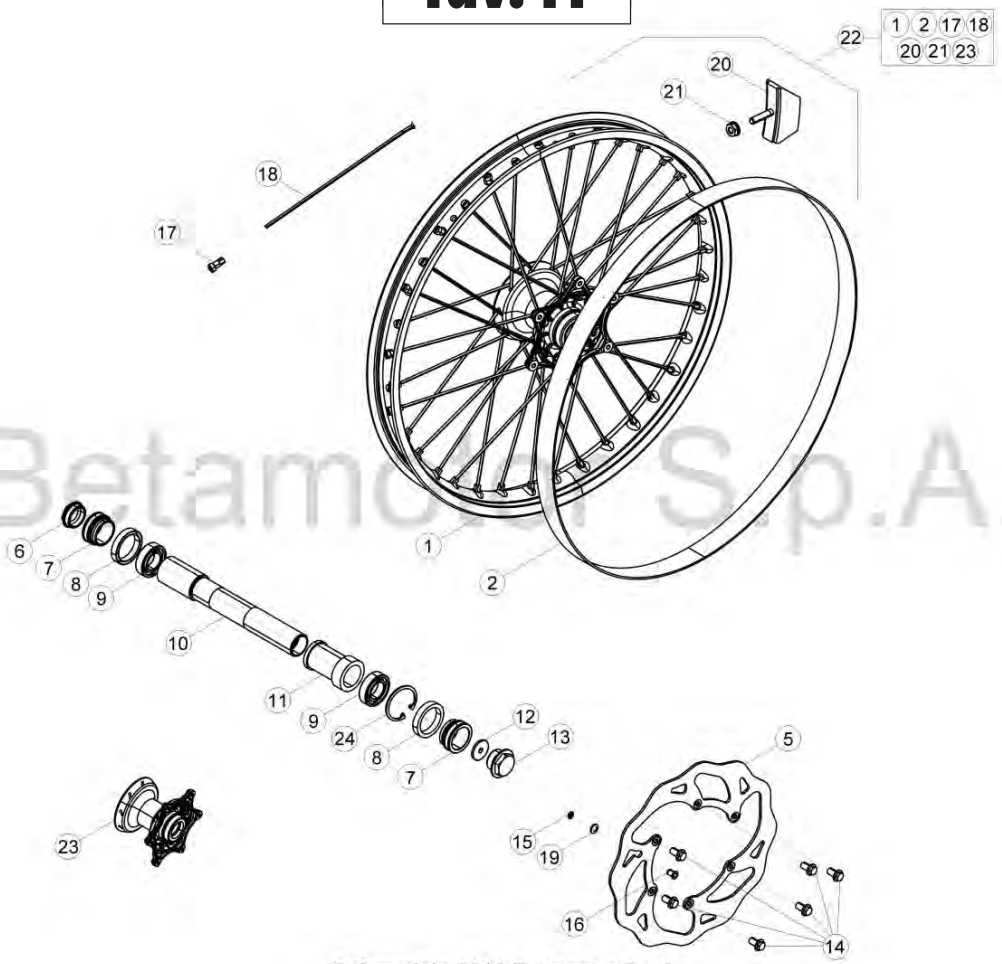

© Copyright 2016 Betamotor S.p.A.

Pos Loc Pos Ps Pos	Numero Number Numé ro Nú mero Nummer	Q.tà Q.ty Q.té M.ge C.ad	Nota Note Note Nota Anm.	Descrizione	Description	Dé signation	Beschreibung	Descripciò n
1	036.41.007.00.59	1		Cerchio anteriore	Front rim	Jante avant	Vorderfelge	Llanta delantera
2	15.38200.000	1		Flap 21x25	Bead 21x25	Flap21x25	Felgenband 21x25	Flap cinta tapa radios 21.25
5	031.41.030.00.00	1		Disco freno	Brake plate	Disque frein	Bremscheibe	Disco freno
6	020.41.007.00.00	1		Tappo perno ruota anteriore	Front wheel pin plug	Bouchon pivot roue avant	Stopfen Pin Vorrad	Tapon eje rueda anterior
6	026.41.002.00.00	1	RACING	Tappo perno ruota anteriore	Front wheel pin plug	Bouchon pivot roue avant	Stopfen Pin Vorrad	Tapon eje rueda anterior
7	031.41.004.00.00	2		Distanziale ant.	Front spacer	Entretoise AV.	Distanzstü ck vorderer	Distanciador del.
8	10.66000.000	2		Paraolio 35x47x7	Oil seal 35x47x7	Pare-huile 35x47x7	Dichtring 35x47x7	Sello de lub. 35x47x7
9	020.41.003.00.00	2		Cuscinetto 30x47x9	Bearing 30x47x9	Roulement 30x47x9	Lager 30x47x9	Cojinete 30x47x9
10	020.41.005.00.00	1		Perno ruota anteriore	Front wheel spindle	Pivot roue AV.	Vorderradzapfen	Perno rueda delantera
11	031.41.015.00.00	1		Distanziale interno	Inner spacer	Entretoise interne	Inneres Distanzstü ck	Distanciador interior
12	020.41.110.00.00	1		Tappo interno perno ruota anteriore	Front wheel pin inner plug	Bouchon int. pivot roue avant	Innerstopfen Pin Vorrad	Tapon int. eje rueda anterior
13	020.41.006.00.00	1		Tappo filettato	Threaded plug	Bouchon fileté	Gewindepfropf	Tapò n filete
14	031.41.043.00.00	6		Vite speciale M6x14	Special screw M6x14	Vis speciale M6x14	Schraube M6x14	Tornillo M6x14
15	28.22660.000	1		Seeger 9E	Circlip 9E	Circlip 9E	Seeger 9E	Seeger 9E
16	021.41.005.00.00	1		Magnete	Magneto	Magneto	Magnet	Magneto
17	036.41.003.00.00	36		Nipplo	Nipple	Ecrou	Nippel	Tuerca
18	036.41.002.00.00	36		Raggio	Spoke	Rayon	Speiche	Radio
19	27.58080.000	1		Rondella spess. 9x13x0,4	Washer 9x13x0,4	Rondelle epaisseur 9x13x0,4	Scheibe 9x13x0,4	Arandela 9x13x0,4
20	036.41.010.00.00	1		Fermacopertone	Tyre retainer	Arrê t pneu	Felgenhalterung	Sujeta cobertura
21	13.17120.000	1		Dado M8 flangiato	Nut M8	Ecrou M8	Mutter M8	Tuerca M8
22	036.41.009.00.59	1		Ruota anteriore p/montata	Fr. wheel assy.	Roue AV. p/monte'	Vormontiertes Vorderrad	Rueda delantera montada
23	031.41.014.80.00	1		Mozzo anteriore c/cuscinetti	Front hub with ballbearing	Moyeu avant avec roulements	Nabe vo.	Buje ant.c/cojinetes
24	C01.26.001.00.00	1		Seeger 47x1,75	Circlip 47x1,75	Circlip 47x1,75	Seeger 47x1,75	Seeger 47x1,75

Tav.42

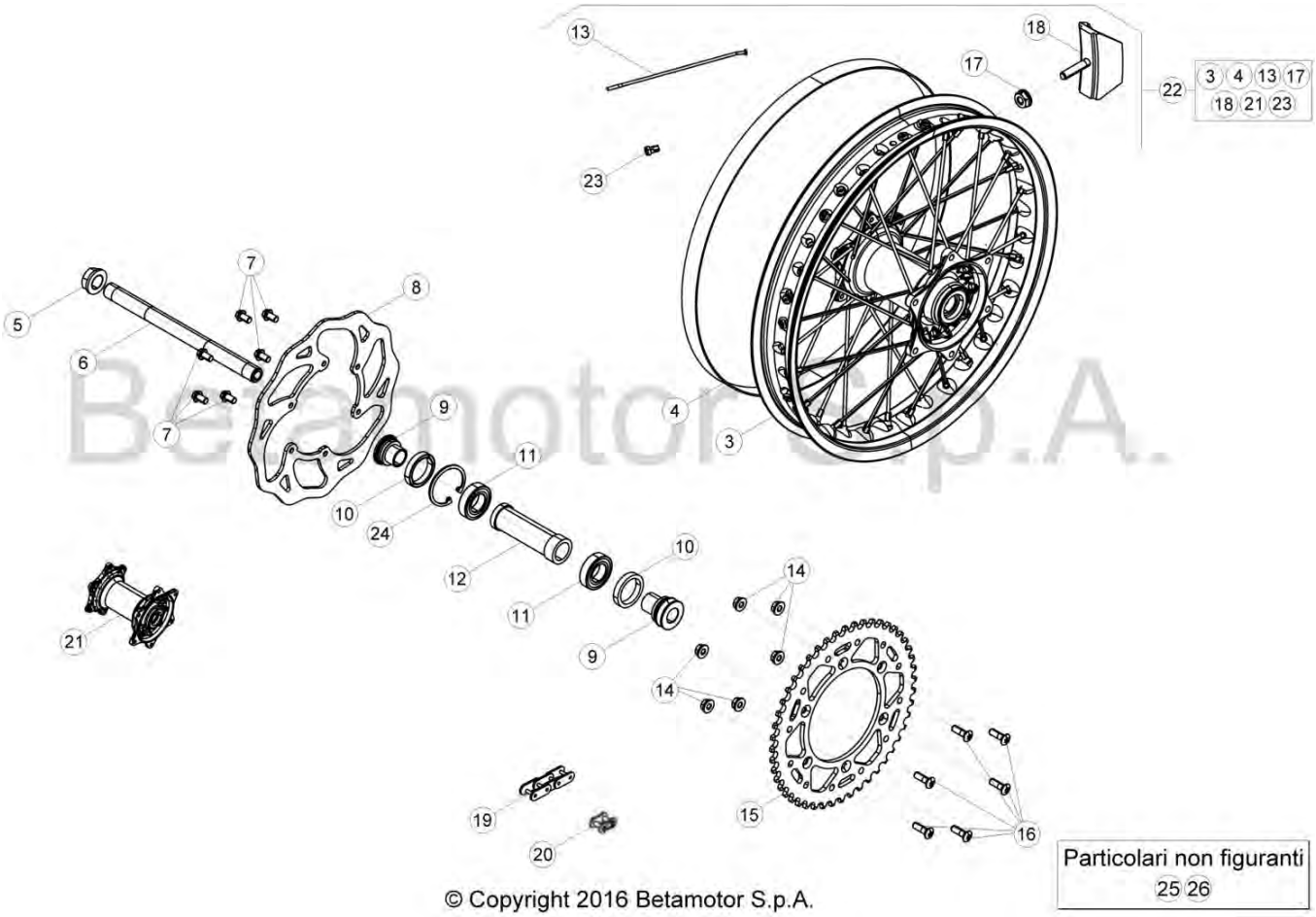

Pos Loc Pos Ps Pos	Numero Number Numé ro Nú mero Nummer	Q.tà Q.ty Q.té M.ge C.ad	Nota Note Note Nota Anm.	Descrizione	Description	Dé signation	Beschreibung	Descripciò n
3	036.42.007.00.59	1		Cerchio ruota posteriore	Rear wheel rim	Janta roue AR.	Hinterradfelge	Llanta rueda trasera
4	15.36000.000	1		Flap 17/18x25	Bead 17/18x25	Flap 17/18x25	Felgenband 17/18x25	Flap cinta tapa radios 17/18x25
5	13.27120.000	1		Dado speciale	Special nut	Ecrou spé ciale	Spezialmutter	Tuerca especial
6	25.55812.000	1		Perno ruota posteriore	Rear wheel pin	Pivot roue arriè re	Hinterradbolzen	Perno rueda trasera
7	031.41.016.00.00	6		Vite TEF M6x14	Screw TEF M6x14	Vis TEF M6x14	Schraube TEF M6x14	Tornillo TEF M6x14
8	031.42.030.00.00	1		Disco freno posteriore	Rear brake disk	Disque frein arriè re	Hinterbremsscheibe	Disco freno trasero
9	031.42.002.00.00	2		Distanziale mozzo post. Dx	RH rear hub spacer	Entretoise moyeu arriere D.	Distanz li	Distanciador buje tras. Der.
10	10.66000.000	2		Paraolio 35x47x7	Oil seal 35x47x7	Pare-huile 35x47x7	Dichtring 35x47x7	Sello de lub. 35x47x7
11	020.42.004.00.00	2		Cuscinetto 25x47x12	Bearing 25x47x12	Roulement 25x47x12	Lager 25x47x12	Cojinete 25x47x12
12	031.42.005.00.00	1		Distanziale interno	Inner spacer	Entretoise interne	Inneres Distanzstü ck	Distanciador interior
13	036.42.004.00.00	36		Raggio ruota posteriore	Rear wheel spokes	Rayons roue AR.	Hinterradspeiken	Radios rueda trasera
14	13.17123.000	6		Dado TECF M8	Nut TECF M8	Ecrou TECF M8	Mutter TECF M8	Tuerca TECF M8
15	031.42.039.00.00	1		Corona Z50	Ring gear Z50	Couronne Z50	Zahnkranz Z50	Corona Z50
15	031.42.047.00.00	1	RACING	Corona Z50	Ring gear Z50	Couronne Z50	Zahnkranz Z50	Corona Z50
16	31.96827.000	6		Vite speciale M8X26	Special screw M8X26	Vis spé ciale M8X26	Spezialschraube M8X26	Tornillo especial M8X26
17	13.17120.000	1		Dado M8 flangiato	Nut M8	Ecrou M8	Mutter M8	Tuerca M8
18	15.17550.000	1		Fermacopertone	Tire fastener	Caoutchouc serrure chambre	Reifen Halter	Agarre cubierta ant.
19	035.42.002.00.00	1		Catena	Chain	Chaî ne	Kette	Cadena
20	035.42.005.00.00	1		Maglia	Link	Maillon	Kettenschloss	Enganche
21	031.42.014.80.00	1		Mozzo posteriore c/cuscinetti	Rear hub with ballbearing	Moyeu arriere avec roulements	Hinterrad Nabe	Buje del. c/cojinetes
22	036.42.008.00.59	1		Ruota posteriore p/montata	Front wheel assy.	Roue arriere p/monte'	Vormontiertes hinterrad	Rueda trasera montada
23	036.42.005.00.00	36		Nipplo	Nipple	Ecrou	Nippel	Tuerca
24	C01.26.001.00.00	1		Seeger 47x1,75	Circlip 47x1,75	Circlip 47x1,75	Seeger 47x1,75	Seeger 47x1,75
25	031.42.028.00.00	1	EU RACING-EU	Corona Z42	Ring gear Z42	Couronne Z42	Zahnkranz Z42	Corona Z42
26	026.42.014.00.00	1	EU RACING-EU	Catena 5/8x 1 1/4 P110	Chain 5/8x 1 1/4 P110	Chaî ne 5/8x 1 1/4 P110	Kette 5/8x 1 1/4 P110	Cadena 5/8x 1 1/4 P110

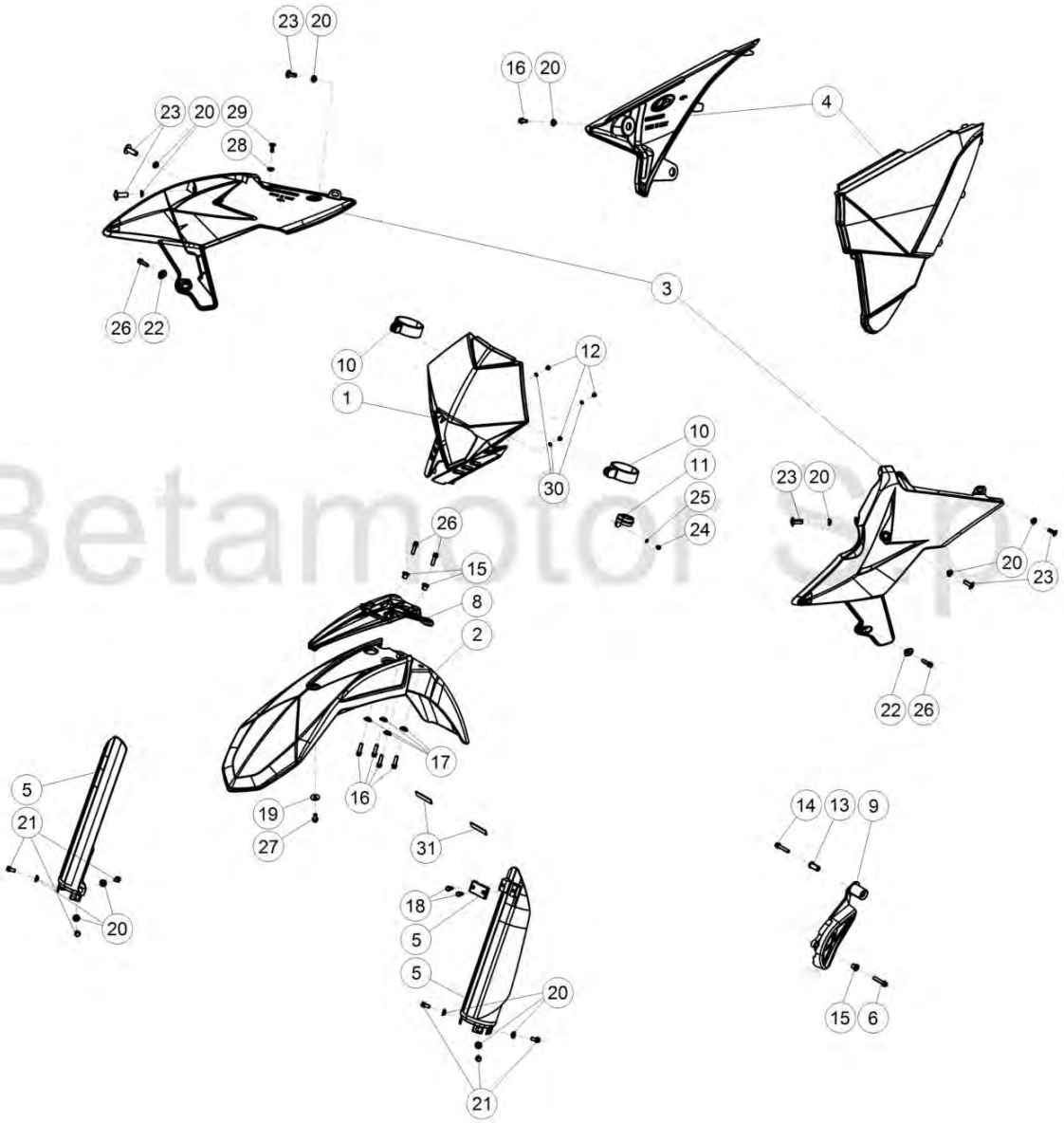

Betamotor S.p.A.

© Copyright 2017 Betamotor S.p.A.

Tav.43A

Pos Loc Pos Ps Pos	Numero Number Numé ro Nú mero Nummer	Q.tà Q.ty Q.té M.ge C.ad	Nota Note Note Nota Anm.	Descrizione	Description	Dé signation	Beschreibung	Descripciò n
1	020.43.015.00.51	1		Mascherina	Mask	Masque	Maske	Má scara
2	031.43.034.10.51	1		Parafango	Mudguard	Garde -boue	Kotflü gel	Guardabarros
3	031.43.140.14.51	1		Convogliatori - coppia	Conveyors - pair	Canalisations - couple	Luftzufü hr - Paar	Deflectores - Par
4	026.43.021.00.51	1		Coppia fianchetti scatola filtro	Airbox panels, pair	Couple cote lat. boî tier filtre à air	Luftfiltergehä useseiten	Flancos derechos caja filtro aire
5	026.45.113.82.51	1		Protezioni stelo-Kit	Fork tube protections-Kit	Jeu protections tube fourche	Kit Abdeckung Gabelschlauch	Juego protecció nes tubos horquilla
6	11.50535.000	1		Bullone 6x45 RS CH8	Bolt 6x45 RS CH8	Boulon 6x45 RS CH8	Bolzen 6x45 RS CH8	Tornillo 6x45 RS CH8
8	020.43.141.10.59	1		Supporto parafango	Fender stay	Appui aile	Kotfluegelstuetze	Soporte de guardabarros
9	020.43.062.10.59	1		Coperchio pignone	Sprocket cover	Couvercle pignon	Deckel Ritzel	Tapa piñ ó n
10	14.40081.000	2		Elastico fissaggio mascherina	Headlight holder elastic rubber	Elastique de fixage cache phare	Befestigungsband Lichtschildchen	Elastico
11	25.24464.000	1		Passacavo	Grommet	Passe-câ ble	Kabeldurchgang	Pasacables
12	31.26190.000	3		Vite M4x12 TCIC	Screw M4x12 TCIC	Vis M4x12 TCIC	Schraube M4x12 TCIC	Tornillo M4x12 TCIC
13	13.49189.000	1		Distanziale	Spacer	Entretoise	Distanzstü ck	Distanciador
14	11.50300.000	1		Bullone 6x30 ch 8 rs	Bolt 6x30 ch 8 rs	Boulon 6x30 ch 8 rs	Bolzen 6x30 ch 8 rs	Tornillo 6x30 ch 8 rs
15	13.49190.000	3		Distanziale 10mm	Spacer 10mm	Entretoise 10mm	Distanzstü ck 10mm	Distanciador 10mm
16	11.48025.000	5		Bullone 6x16 ch 8 rs	Bolt 6x16 ch 8 rs	Boulon 6x16 ch 8 rs	Bolzen 6x16 ch 8 rs	Tornillo 6x16 ch 8 rs
17	13.54841.000	4		Distanziale	Spacer	Entretoise	Distanzstü ck	Distanciador
18	31.79960.000	2		Vite autofilettante M6x15	Self tapping screw M6x15	Vis taraud M6x15	Schraube, Blech M6x15	Tornillo autorrosc. M6x15
19	27.74786.000	1		Rondella	Washer	Rondelle	U.Scheibe	Arandela
20	13.54820.000	13		Distanziale 6,5x9,0x13,5	Spacer 6,5x9,0x13,5	Entretoise 6,5x9,0x13,5	Distanzstü ck 6,5x9,0x13,5	Distanciador 6,5x9,0x13,5
21	11.47015.000	6		Bullone M6x12	Bolt M6x12	Boulon M6x12	Bolzen M6x12	Tornillo M6x12
22	020.43.012.00.00	2		Distanziale	Spacer	Entretoise	Distanzstü ck	Distanciador
23	31.95510.000	6		Vite TBCE M6x12	Screw TBCE M6x12	Vis TBCE M6x12	Schraube TBCE M6x12	Tornillo TBCE M6x12
24	31.23360.000	1		Vite autofilettante 4x10	Self tapping screw 4x10	Vis taraud 4x10	Schraube, Blech 4x10	Tornillo autorrosc. 4x10
25	27.34650.000	1		Rondella	Washer	Rondelle	U.Scheibe	Arandela
26	11.49070.000	4		Bullone 6x20 ch rs	Bolt 6x20 ch rs	Boulon 6x20 ch rs	Bolzen 6x20 ch rs	Tornillo 6x20 ch rs
27	11.46501.000	1		Bullone M6x10	Bolt M6x10	Boulon M6x10	Bolzen M6x10	Tornillo M6x10
28	13.62000.000	1		Distanziale	Spacer	Entretoise	Distanzstü ck	Distanciador
29	31.30035.000	1		Bullone M6x25 TBCEI	Bolt M6x25 TBCEI	Boulon M6x25 TBCEI	Bolzen M6x25 TBCEI	Tornillo M6x25 TBCEI
30	27.34650.000	3		Rondella 4.9	Washer 4.9	Rondelle 4.9	U.Scheibe 4.9	Arandela 4.9
31	12.33062.000	2	EU	Catadiottro laterale	Side reflector	Catadioptre laté ral	Seiten Rü ckstrahler	Catafaro lateral

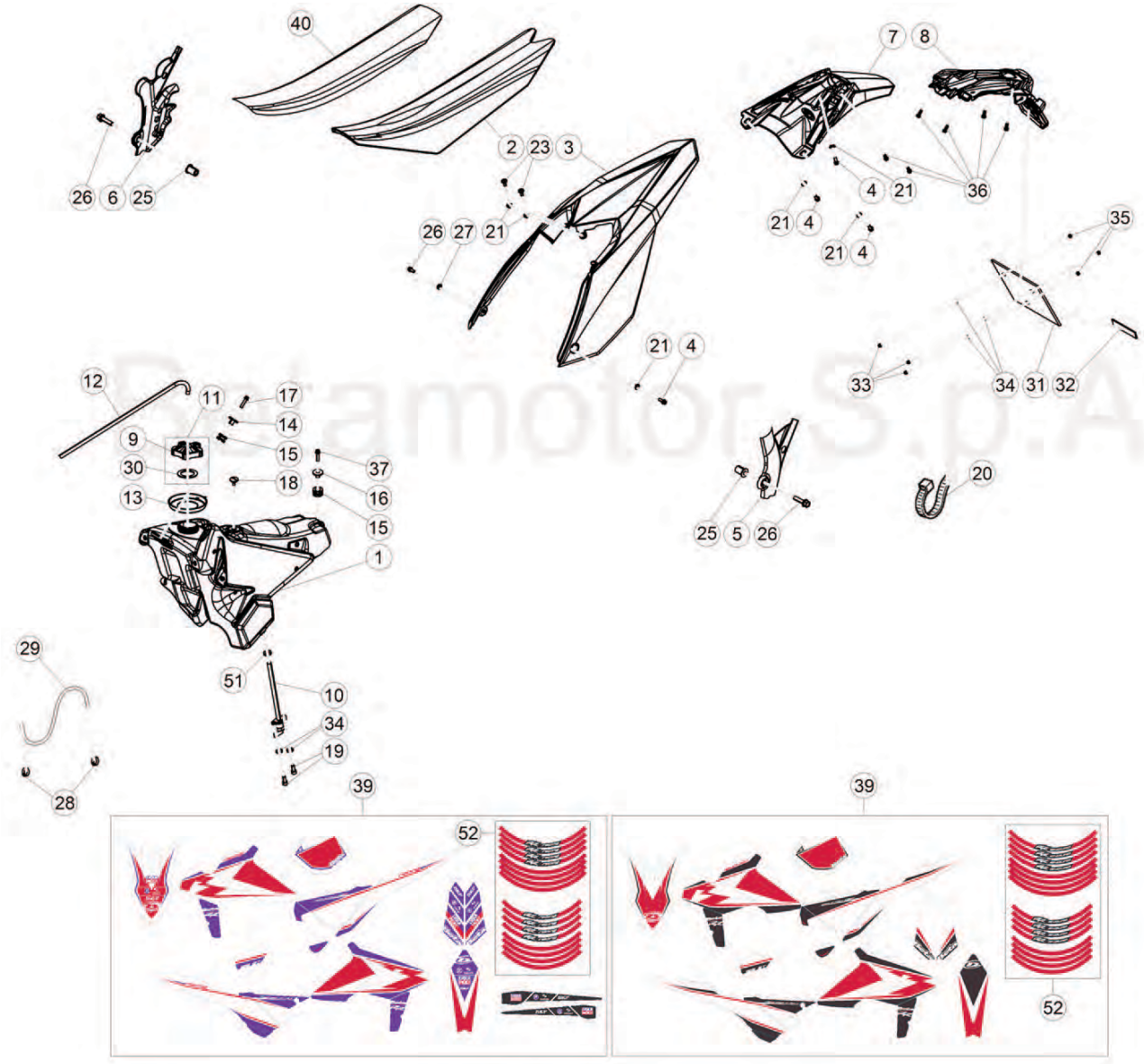

© Copyright 2018 Betamotor S.p.A.

Tav.43B

Pos Loc Pos Ps Pos	Numero Number Numéro Número Nummer	Q.tà Q.ty Q.té M.ge C.ad	Nota Note Note Nota Anm.	Descrizione	Description	Désignation	Beschreibung	Descripción
1	031.43.072.10.51	1		Serbatoio benzina	Fuel tank	Reservoir carb.	Kraftstofftank	Dep. carburante
2	031.43.143.00.00	1		Sella	Seat	Siege	Sattel	Sillin
2	031.43.063.00.00	1	RACING	Sella	Seat	Siege	Sattel	Sillin
3	036.43.003.10.51	1		Parafango posteriore	Rear mudguard	Garde-boue AR.	Hinterradkotflügel	Guardabarros tras.
4	11.48025.000	4		Bullone 6x16 ch 8 rs	Bolt 6x16 ch 8 rs	Boulon 6x16 ch 8 rs	Bolzen 6x16 ch 8 rs	Tornillo 6x16 ch 8 rs
5	020.43.060.10.59	1		Protezione telaio Sx	L.H. frame guard	Protection chassis G.	Rahmenschutz Links	Protección bastidor izquierda
6	035.43.004.00.59	1		Protezione telaio	Frame guard	Protection chassis	Rahmenschutz	Protección bastidor
7	036.43.006.10.59	1		Portatarga	Plate holder	Porte-plaque	Kennzeichenträger	Porta matr.
8	020.43.034.10.59	1	EU	Portatarga	Plate holder	Porte-plaque	Kennzeichenträger	Porta matr.
9	036.43.041.80.00	1		Tappo serbatoio	Filler cap	Bouchon de réservoir	Tankverschluss	Tapón depósito
10	020.43.007.00.00	1		Rubinetto benzina	Fuel cock.	Robinet melange	Krafstoffhahn	Grifo mezcla
11	036.43.041.82.00	1		Tappo serbatoio benzina compl.	Tank cap assy.	Bouchon de réservoir complet	Tankverschluss kpl.	Tapón depósito completo
12	021.43.006.00.00	1		Tubo sfiato	Bleeder pipe	Tuyau purge	Leitung Entlueftungsventil	Tubo purga de aire
13	026.43.029.00.00	1	EU	Anello	O-Ring	Bague d' étanchéité	O-Ring	Anillo
14	020.43.002.00.00	1		Distanziale serbatoio benzina	Fuel tank spacer	Entretoise réservoir carburant	Distanz Benzintank	Distanciador depósito gasolina
15	032.37.013.00.00	2		Silen-t-bloc	Silentbloc	Silentbloc	Puffer	Silent-block
16	031.43.002.00.00	1		Distanziale	Spacer	Entretoise	Distanzstück	Distanciador
17	11.50010.000	1		Bullone M6x25	Bolt M6x25	Boulon M6x25	Bolzen M6x25	Tornillo M6x25
18	31.89010.000	1		Vite spec. bloccaggio sella	Seat locking screw	Vis bloccage selle	Schraube	Tornillo bloqueo sillin
19	31.29810.000	2		Vite 5x12	Screw 5x12	Vis 5x12	Schraube 5x12	Tornillo 5x12
20	15.14264.000	1		Fascetta	Clamp	Collier	Schelle	Abrazadera
21	13.54820.000	6		Distanziale 6,5x9,0x13,5	Spacer 6,5x9,0x13,5	Entretoise 6,5x9,0x13,5	Distanzstück 6,5x9,0x13,5	Distanciador 6,5x9,0x13,5
23	31.95510.000	2		Vite TBCE M6x12	Screw TBCE M6x12	Vis TBCE M6x12	Schraube TBCE M6x12	Tornillo TBCE M6x12
25	27.33740.000	2		Rivetto filettato M6	Threaded rivet M6	Rivet fileté M6	Niete mit gewinde M6	Remache roscado M6
26	11.49070.000	3		Bullone 6x20 ch rs	Bolt 6x20 ch rs	Boulon 6x20 ch rs	Bolzen 6x20 ch rs	Tornillo 6x20 ch rs
27	13.62000.000	1		Distanziale	Spacer	Entretoise	Distanzstück	Distanciador
28	C07.08.008.00.00	2		Anello stringitubo CE12	Pipe clamping ring CE12	Anneau serre-tube CE12	Schlauchschelle CE12	Anillo prensatubo CE12
29	026.43.005.00.00	1		Tubo serbatoio-carburatore	Tank-carburettor pipe	Tuyau réservoir-carburateur	Tankleitung-Vergaser	Tubo radiador-carburador
30	031.43.116.00.00	1		Guarnizione tappo	Packing for cap	Joint bouchon	Deckeldichtung	Junta tapón
31	018.43.010.10.59	1	EU	Supporto targa	Licence plate bracket	Support plaque	Nummernschildträger	Soporte placa porta matrícula
32	12.33086.000	1	EU	Catadiottro posteriore	Rear reflector	Catadioptre AR.	Rückstrahler hinten	Catafaro tras.
33	13.11010.000	3	EU	Dado autobloccante M5	Self locking nut M5	Ecrou de sécurité M5	Mutter, selbstsichernd M5	Tuerca de seguridad M5
34	27.36000.000	5	EU	Rondella 5x11	Washer 5x11	Rondelle 5x11	U.Scheibe 5x11	Arandela 5x11
35	31.29860.000	3	EU	Vite M5x16 TTLIC	Screw M5x16 TTLIC	Vis M5x16 TTLIC	Schraube M5x16 TTLIC	Tornillo M5x16 TTLIC
36	31.79960.000	6	EU	Vite autofilettante M6x15	Self tapping screw M6x15	Vis taraud M6x15	Schraube, Blech M6x15	Tornillo autorrosc. M6x15
37	11.50300.000	1		Bullone 6x30 ch rs	Bolt 6x30 ch rs	Boulon 6x30 ch rs	Bolzen 6x30 ch rs	Tornillo 6x30 ch rs
39	031.43.164.82.00	1		Decalco serie completa	Transfer set	Série Décalcomanie	Serie Abziehbild	Seire Calcomaní as
39	031.43.166.82.00	1	RACING	Decalco serie completa	Transfer set	Série Décalcomanie	Serie Abziehbild	Seire Calcomaní as
40	031.43.144.00.00	1		Copertura sella	Saddle cover	Hous. de selle	Abdeckung	Cubierta sillin
40	031.43.064.00.00	1	RACING	Copertura sella	Saddle cover	Hous. de selle	Abdeckung	Cubierta sillin
51	026.43.034.00.00	1		Anello di tenuta	Oil seal	Joint d' étanchéité	Ölschutzring	Retén de aceite
52	031.43.154.00.00	1		Decalco cerchi	Trimmings kit for rims	Jeu enjoliv. jantes	Abziehbildsatz Felgen	Juego calcom. llantas
52	031.43.156.00.00	1	RACING	Decalco cerchi	Rims stickers	Décalcomanie jantes	Abziehbild Felgen	Calcomaní as llantas

Betamotor S.p.A.

© Copyright 2016 Betamotor S.p.A.

Pos Loc Pos Ps Pos	Numero Number Numé ro Nú mero Nummer	Q.tà Q.ty Q.té M.ge C.ad	Nota Note Note Nota Anm.	Descrizione	Description	Dé signation	Beschreibung	Descripciò n
1	035.44.007.00.00	1		CD Manuale uso e manutenzione	Owner' s manual CD	CD Manuel d' utilisation et entretien	CD Bedienungs und Wartungshandbuch	CD Manual de Uso y Manutenció n
2	020.44.202.80.00	1		Borsa attrezzi	Tool roll	Trousse à outils	Werkzeugtasche	Bolsa herramientas
3	020.44.003.00.00	1		Chiave a brugola 6mm	Allen wrench 6mm	Clé Allen 6mm	Sechskantschlü ssel 6mm	Llave de imbus 6mm
4	020.44.004.00.00	1		Bussola 8	Bush 8	Joint 8	Buchse 8	Buje 8